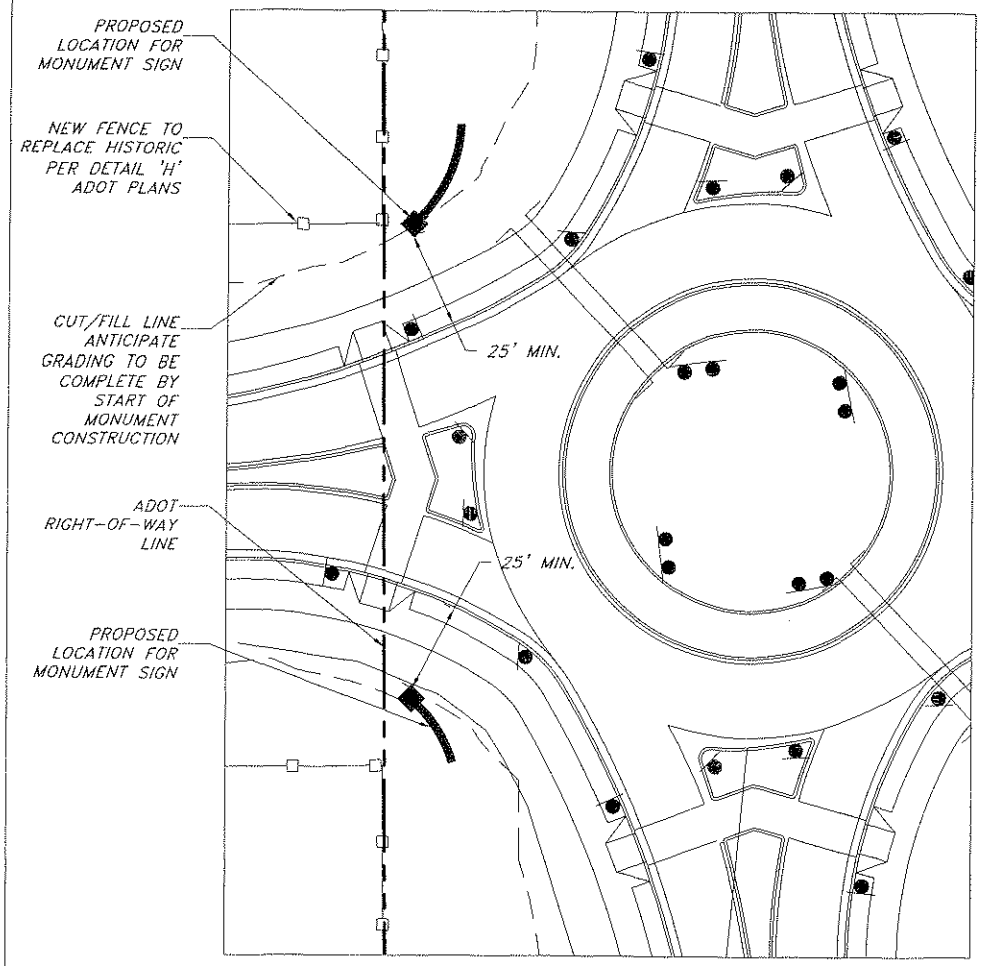

SOUTH ENTRY

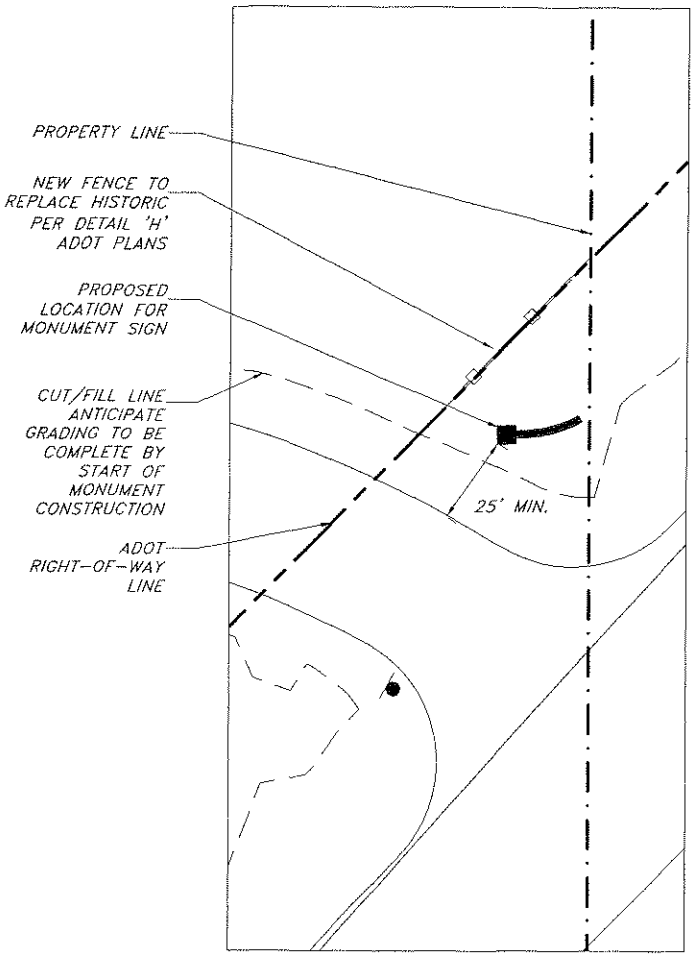

NORTH ENTRY

COCONINO COUNTY ARIZONA
PARKS & RECREATION

FORT TUTHILL ENTRY MONUMENT
CONCEPT SKETCH 1 SITE PLAN

NOVEMBER, 2013

GRAPHIC SCALE
30 0 15 30 60
HORIZONTAL SCALE 1"= 30'

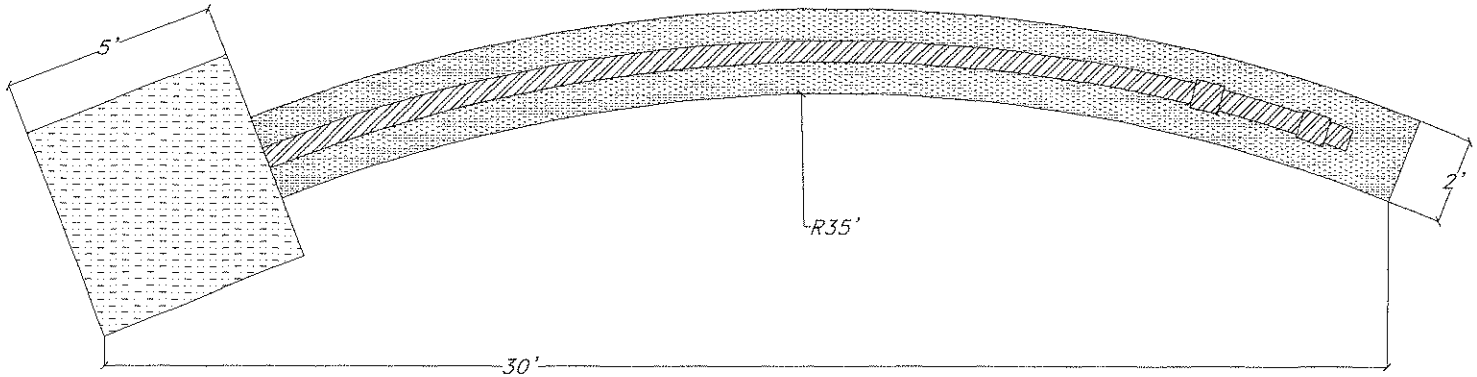

PLAN: NORTH SIDE OF ROAD

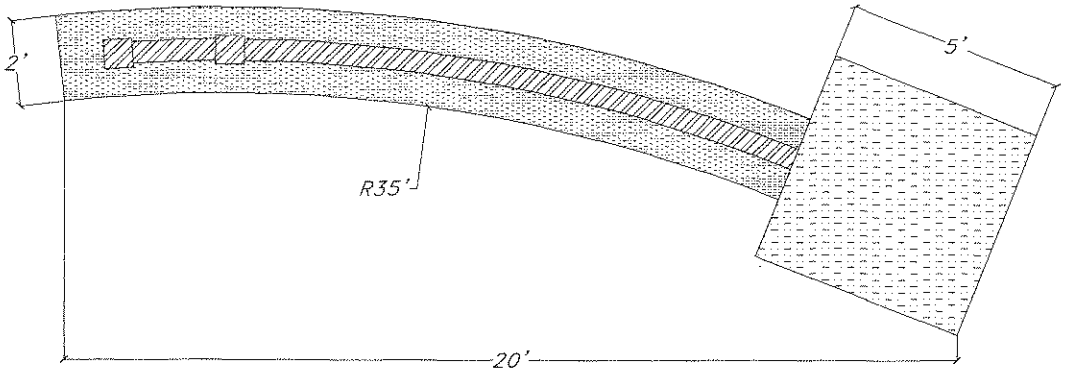

PLAN: SOUTH SIDE OF ROAD

COCONINO COUNTY ARIZONA
PARKS & RECREATION

FORT TUTHILL ENTRY MONUMENT
SOUTH ENTRANCE: CONCEPT SKETCH 1 PLAN

NOVEMBER, 2013

SCALE: 3/8"=1'

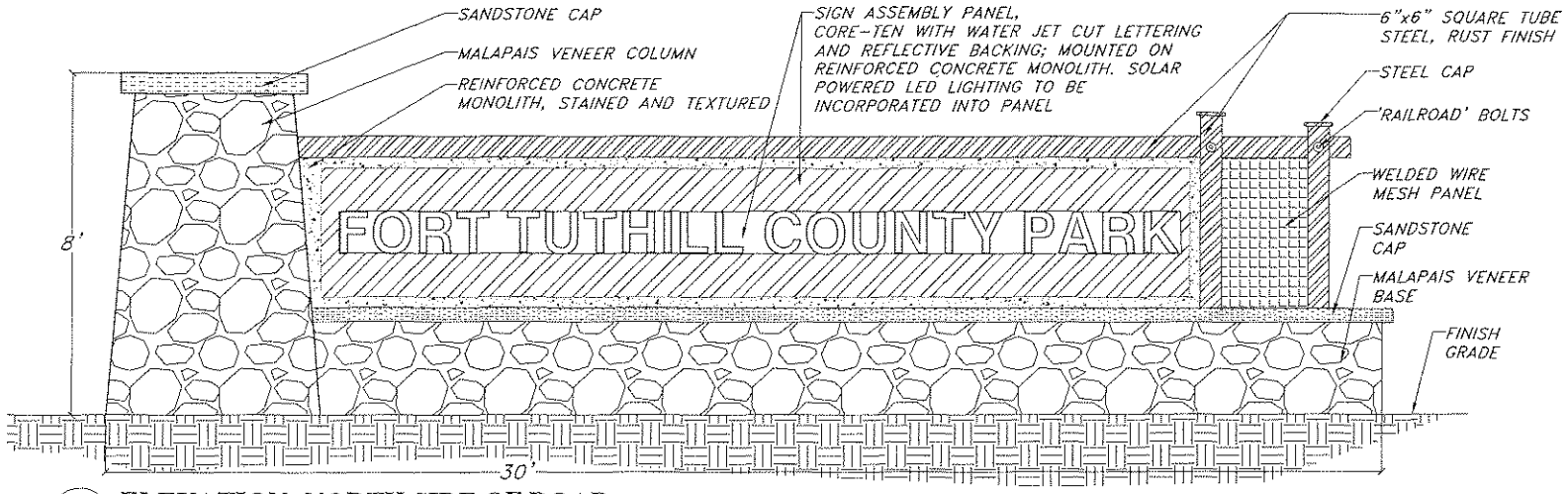

ELEVATION: NORTH SIDE OF ROAD

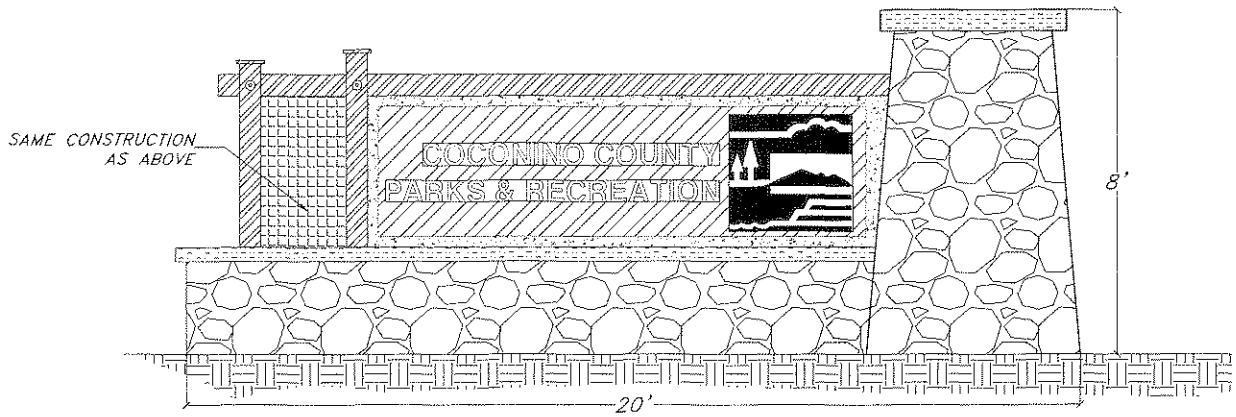

ELEVATION: SOUTH SIDE OF ROAD

COCONINO COUNTY ARIZONA
PARKS & RECREATION

FORT TUTHILL ENTRY MONUMENT
SOUTH ENTRANCE: CONCEPT SKETCH 1 ELEVATION

NOVEMBER, 2013

SCALE: 3/8"=1'

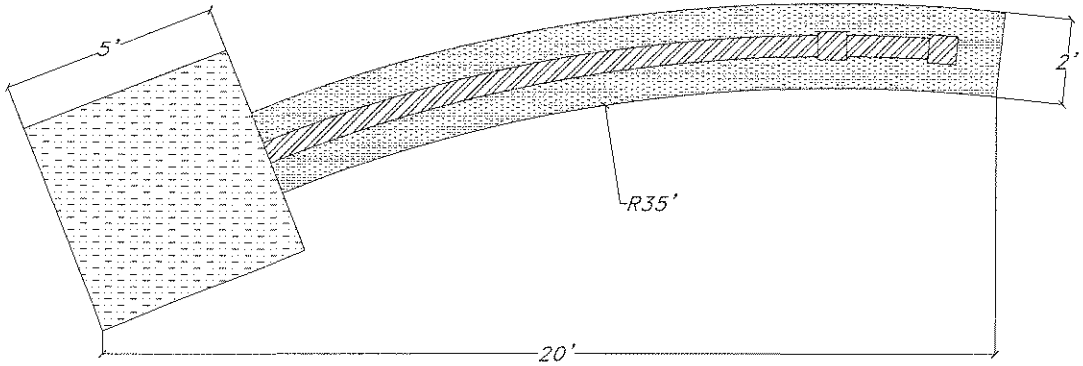

PLAN: NORTH ENTRY

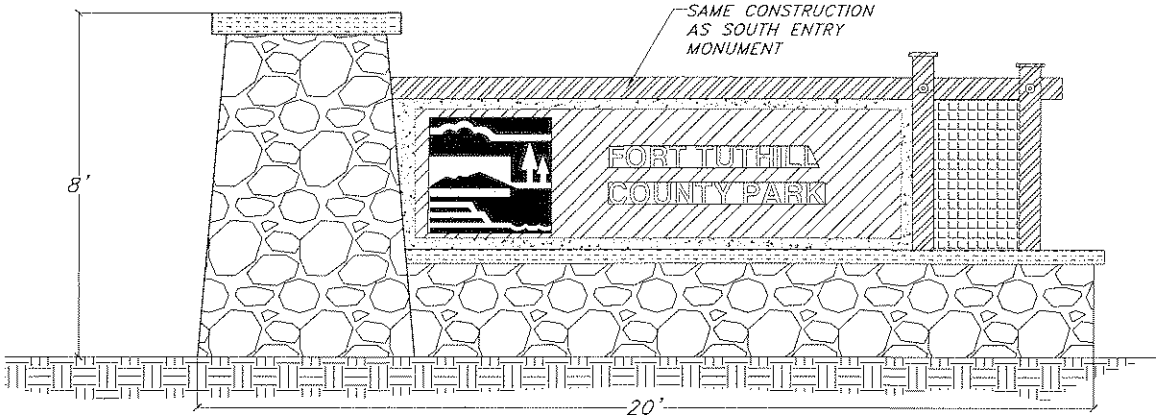

ELEVATION: SOUTH ENTRY

COCONINO COUNTY ARIZONA
PARKS & RECREATION

FORT TUTHILL ENTRY MONUMENT
NORTH ENTRANCE: CONCEPT SKETCH 1 PLAN & ELEVATION

NOVEMBER, 2013

SCALE: 3/8"=1'