Coconino County

Engineering and Construction

Criteria Manual

TABLE OF CONTENTS

PERSPECTIVE & OBJECTIVES 4
ABBREVIATIONS 5
DEFINITIONS AND TERMS ..... 12~~11~~
Chapter I ..... 21~~20~~
AGENCY CONTROLS AND REVIEWS ..... 21~~20~~
QUALIFICATIONS ..... 21~~20~~
COUNTY ..... 21~~20~~
STATE ..... 22~~21~~
FEDERAL ..... 22~~21~~
UTILITY COMPANIES ..... 23~~22~~
Chapter II ..... 24~~23~~
CONSTRUCTION AND IMPROVEMENT PLANS ..... 24~~23~~
GENERAL ..... 24~~23~~
PLANS ..... 24~~23~~
REVIEW & RESPONSIBILITY ..... 24~~23~~
CONTENT ..... 25~~24~~
FORMAT ..... 25~~24~~
DRAFTING STANDARDS ..... 25~~24~~
COVER SHEET ..... 25~~24~~
RIGHT-OF-WAY-PLANS ..... 26~~25~~
CONSTRUCTION ..... 28~~27~~
QUANTITIES ..... 29~~28~~
RECORD DRAWINGS (AS-BUILT PLANS) ..... 29~~28~~
FINAL PLAN SUBMITTAL ..... 29~~28~~
GRADING AND DRAINAGE PLANS ..... 29~~28~~
GRADING PLAN PRESENTATION ..... 30~~29~~
WATER AND SEWER PLANS ..... 31~~29~~
STREET PLANS ..... 32~~31~~
GENERAL NOTES ..... 34~~33~~
Chapter III ..... 39~~37~~
SURVEYING AND MAPPING ..... 39~~37~~
QUALIFICATIONS ..... 39~~37~~
SURVEYING ..... 39~~37~~
MAPPING ..... 40~~38~~
Chapter IV ..... 42~~40~~
DESIGN CRITERIA ..... 42~~40~~
APPROVAL ..... 42~~40~~
GENERAL CONSIDERATIONS ..... 42~~40~~
ENVIRONMENTAL ANALYSIS & MITIGATION ..... 44~~42~~
DRAINAGE ..... 44~~42~~
FIRE SAFETY ..... 45~~43~~
MAIL BOXES ..... 45~~43~~
STREETS/ROADS ..... 45~~43~~

DRIVEWAYS ..... 47~~45~~
TRAFFIC DESIGN ..... 50~~48~~
TRAFFIC SIGNALS ..... 50~~48~~
UTILITIES ..... 50~~48~~
BICYCLES ..... 55~~53~~
Chapter V ..... 60~~58~~
ROAD DESIGN STANDARDS ..... 60~~58~~
Additional Criteria ..... 61~~59~~
Chapter VI ..... 81~~79~~
GRADING AND EXCAVATION ..... 81~~79~~
Section 3304 – PURPOSE ..... 81~~79~~
Section 3305 – SCOPE ..... 81~~79~~
Section 3306 – PERMITS REQUIRED ..... 81~~79~~
Section 3307 - HAZARDS ..... 82~~80~~
Section 3308 – DEFINITIONS ..... 82~~80~~
Section 3309 – GRADING PERMIT REQUIREMENTS ..... 84~~82~~
Section 3310 – GRADING FEES ..... 86~~84~~
Section 3312 – CUTS ..... 87~~85~~
Section 3313 – FILLS ..... 88~~85~~
Section 3314 – SETBACKS ..... 88~~86~~
Section 3315 – DRAINAGE AND TERRACING ..... 89~~87~~
Section 3316 – EROSION CONTROL ..... 90~~88~~
Section 3317 – GRADING INSPECTION ..... 94~~92~~
Section 3318 – COMPLETION OF WORK ..... 95~~93~~
Chapter VII ..... 96~~94~~
CONSTRUCTION CRITERIA ..... 96~~94~~
APPROVAL ..... 96~~94~~
GENERAL CONSIDERATIONS ..... 96~~94~~
RECORD DRAWINGS REQUIREMENTS (AS BUILT PLANS) ..... 97~~95~~
TRAFFIC CONTROL ..... 98~~95~~
ROADS ..... 98~~96~~
EARTHWORK ..... 98~~96~~
DRAINAGE ..... 99~~96~~
TESTING/INSPECTION ..... 99~~96~~
WORK IN COUNTY RIGHTS-OF-WAY AND EASEMENTS ..... 99~~97~~
FINAL ACCEPTANCE ..... 100~~98~~
WATER AND SEWER ..... 101~~98~~
Chapter VIII ..... 105~~102~~
QUALITY ASSURANCE ..... 105~~102~~
DESIGN CRITERIA ..... 105~~102~~
ROADWAYS ..... 105~~102~~
CHANNELIZATION/DRAINAGE FACILITIES ..... 106~~103~~
DESIGN REVIEW ..... 107~~104~~
ROADWAY ..... 107~~104~~
DRAINAGE ..... 107~~104~~
CONSTRUCTION REVIEW ..... 108~~105~~
ROADWAY ..... 108~~105~~
DRAINAGE (Not Including Concrete Structures) ..... 109~~106~~

CONCRETE STRUCTURES.....110~~107~~
Chapter IX .....111~~108~~
ADDENDUM TO M.A.G. SPECIFICATIONS.....111~~108~~
Appendix One .....134~~131~~
FEE SCHEDULE.....134~~131~~
Appendix Two .....136~~133~~

PERSPECTIVE & OBJECTIVES

The laws of the State of Arizona and its political subdivisions, as presently constituted, require permits from various regulatory agencies for most activities involving construction, engineering, surveying, and associated practices. At the County level these activities will, more often than not, involve road building and/or subdivision creation. Because the County is required to issue permits for these activities and a substantial portion of the permitted construction eventually becomes public property, there is an implication and expectation that construction permitted and accepted by the County meets commonly accepted standards for safety and utility. Therefore, this manual is designed to both encourage and require design and construction which meets these expectations and standards and which can be defended both rationally and legally.

The manual has been created to provide standards, specifications, and recommendations associated with good engineering practice and pertaining to hazard mitigation, public health, safety, and welfare in Coconino County. It is recognized that the use of widely accepted industry standards reduces both design time and review time - even for creative engineering work. It is understood that some circumstances dictate innovative designs and the creative use of material and method. Nothing in this manual is intended to discourage or prohibit new or unusual methods, designs, and materials.

It is also recognized that the use of standard designs and materials, especially for public facilities and works, is often more desirable than not when viewed from the perspective of efficiency of maintenance, repair, or replacement or with regard to public safety.

It is anticipated that the primary users of these standards, specifications, and recommendations will be professionals licensed in the State of Arizona.

F.G. Stanley
Engineering Division
Coconino County
Public Works Department

ABBREVIATIONS

ABBREVIATIONS:

Whenever the following abbreviations are used in these specifications, standard details or on the plans, they are to be construed the same as the respective expressions represented.

A

AAC	Arizona Administrative Code
AASHTO	American Association of State Highway and Transportation Officials
AAN	American Association of Nurserymen
AB	Aggregate base
Aban	Abandon
ABC	Aggregate base course
AC	Asphalt cement or concrete
ACB	Asphalt concrete base
ACI	American Concrete Institute
ACP	Asbestos cement pipe
ACPA	American Concrete Pipe Association
ACWS	Asphalt Concrete Wearing Surface
ADEQ	Arizona Department of Environmental Quality
AEC	Arizona Electric Code
AFRB	Arizona Fire Rating Bureau
AGA	American Gas Association
AGC	Associated General Constructors of America, Inc.
Agg	Aggregate
ADOT	Arizona Department of Transportation
Ahd	Ahead
AIA	American Institute of Architects
AIEE	American Institute of Electrical Engineers
AISC	American Institute of Steel Construction
ANSI	American National Standards Institute
APA	American Plywood Association
Approx	Approximate
APWA	American Public Works Association
AR	Aged residue
ARS	Arizona Revised Statues
ASCE	American Society of Civil Engineers
ASME	American Society of Mechanical Engineers
Asph	Asphalt
ASTM	American Society for Testing Materials
Ave	Avenue
AWPA	American Wood Preservers Association

AWSC	American Welding Society Code
AWWA	American Water Works Association

B

Bbl	Barrel
BC	Beginning of curve
BCR	Beginning of curb return
Beg	Beginning
Bk	Book or Back
Blvd	Boulevard
BM	Bench Mark or Board Measure
Brg	Bearing
BST	Bituminous Surface Treatment
BTB	Bituminous Treated Base
BTU	British Thermal Units
BVC	Beginning of Vertical Curve

C

C	Centigrade or Curb
CB	Catch Basin
CBF&C	Catch basin frame & cover
CC or C/C	Center to Center
CCR	Coconino County Records
CE	County Engineer
CF	Curb Face
cfs	Cubic Feet per second
ClP	Cast Iron pipe
CL	Centerline
Cm	Centimeter
CMP	Corrugated metal pipe
CO	Clean Out
Col	Column
Conc	Concrete
Const	Construct
CP	Concrete Pipe (non-reinforced)
CTB	Cement Treated Base
Cu	Cubic

D

Deg	Degree
DF	Douglas Fir
DG	Decomposed granite
Dia	Diameter
Dim	Dimension
DlP	Ductile Iron Pipe
Div	Division
Dr	Drive
Drwg	Drawing

Dwy	Driveway

E

Ea	Each
Ease	Easement
E	East
EC	End of Curve
ECR	End of Curb Return
El or Elv	Elevation
Equa or Eq	Equation
EVC	End of vertical curve
Ex or Exist	Existing

F

F	Fahrenheit
FB	Field book
FGC	Federal Communications Commission
F & C	Frame & cover
FH	Fire Hydrant
FHWA	Federal Highway Administration
FL or F	Floor line or flow line
Fl El	Floor Elevation
Fnd	Found
fps	Feet per second
FS	Finished surface
FSS	Federal Specifications and Standards
Ft	Foot or feet

G

G	Gutter
Ga	Gage
Galv	Galvanized
GL	Ground line
gpm	Gallons Per Minute
Gr	Grade

H

H	High or height
HC	House connection
Hdwl	Headwall
Horiz	Horizontal
Hwy	Highway

I

ICA	Industrial Commission of Arizona
ID	Improvement District or inside diameter
IEEE	Institute of Electrical and Electronic Engineers
In	Inch

Inv	Invert or Invert Elevation
IP	Iron Pipe

J

Jt	Joint
JC	Junction Chamber
Jct	Junction
JS	Junction Structure

L

L	Length
Lat	Latitude
Lb	Pound
LF	Linear Feet
Long	Longitude
Lf	Left

M

MAG	Maricopa Association of Governments
Max	Maximum
Meas	Measured
MH	Manhole
MHF&C	Manhole frame and cover
Min	Minutes or Minimum
Misc	Miscellaneous
mn	Millimeter
Mon	Monument
MUTCO	Manual on Uniform Traffic Control Devices

N

N	North
NBS	National Bureau of Standards
NCPI	National Clay Pipe Institute
NE	Northeast
NEC	National Electric Code
NEMA	National Electrical Manufacturer's Association
NFPA	National Fire Protection Association
NP	Non-Plastic
NPI	Non-Pay Item
NSC	National Safety Council
NSF	National Sanitation Foundation
NW	Northwest
No	Number

O

OC	On center
OD	Outside diameter
OSHA	Occupational Safety and Health Administration

Oz	Ounces

P

P.C	Point of curvature
PCC	Point of compound curve
PI	Point of intersection or plastic index
PL	Property line
POC	Point of Curve
POS	Point of Spiral
PP	Power pole
ppm	Parts Per Million
PRC	Point of reverse curve
Prop	Property
psi	Pounds per square inch
psf	Pounds per square foot
PT or POT	Point of Tangent
Pvmt	Pavement

Q

Q	Rate of Flow

R

R or RAD	Radius
RC	Reinforced concrete
RCP	Reinforced concrete pipe
Rd	Road
Rdwy	Roadway
Reinf	Reinforced, Reinforcing
Ret Wall	Retaining Wall
RGRCP	Rubber Gasket Reinforced Concrete Pipe
rpm	Revolutions Per Minute
Rt	Right
R/W or ROW	Right-of-Way

S

S	South or slope
SAE	Society of Automotive Engineers
San	Sanitary
SC	Spiral to Curve
SD	Storm Drain or Sewer District
Sec	Seconds or Section
SE	Southeast
Sht	Sheet
Spec or Specs	Specifications
SS	Sanitary Sewer
St	Street
Sta	Station
Std	Standard

Str Gr	Structural Grade
Struct	Structure or Structural
SW	Southwest

T

T	Tangent Distance
Tel	Telephone
Temp	Temporary
TH	Test hole
TP	Telephone pole
Trans	Transition
TS	Traffic signal or Tangent to spiral
Typ	Typical

U

UBC	Uniform Building Code
UL	Underwriters' Laboratories, Inc.
UPC	Uniform Plumbing Code
USC & GS	United States Coast and Geodetic Survey
USGS	United States Geological Survey

V

V	Velocity of flow
VC	Vertical curve
VCP	Vitrified clay pipe
Vert	Vertical

W

W	West or width
Wt	Weight

Y

Yd	Yard

'	Feet or Minutes
"	Inches or Seconds
°	Degrees
%	Percent
#	Number or Pound
@	At
/	Per
=	Equals

TITLES AND HEADINGS

Titles and headings are for convenience of reference and have no bearing on the interpretation of these Specifications.

When a publication is specified, it refers to the most recent date of issue, including interim publications, unless a specific date or year of issue is provided.

DEFINITIONS AND TERMS

Whenever in these specifications or in other contract documents the following terms or pronouns in place of them are used, the intent and meaning shall be interpreted as follows:

Addendum: A supplement to any of the Contract Documents issued, in writing, after advertisement of but prior to the opening of bids for a contract.

Advertisement: The public announcement, as required by law, inviting bids for work to be performed or materials to be furnished.

Agency: A governmental agency.

Architect: The individual or firm licensed in the State of Arizona who has accomplished the architectural services for the project, including his representatives.

As Built Plans: Construction drawings, documents or plans sealed and stamped by a professional registered in the State of Arizona (usually an Engineer or Land Surveyor) which depict the actual improvements made and their actual locations. As built plans are also called and known as “As Builts” “Record Drawings” or “As Constructed”.

As Constructed Plans: Construction drawings, documents or plans sealed and stamped by a professional registered in the State of Arizona (usually an Engineer or Land Surveyor) which depict the actual improvements made and their actual locations. As built plans are also called and known as “As Builts” “Record Drawings” or “As Constructed”.

Award: The formal action of the governing body is accepting a proposal.

Backfill: Material placed in an excavated space to fill such space. For trenches, this space will be the area from 1 foot above the top of the pipe or conduit to the existing or proposed finished grade of pavement.

Base Course: The upper course of the granular base of a pavement or the lower course of an asphalt concrete pavement structure.

Bedding: Granular material placed in the area of the bottom of an excavation.

Bidder: Any qualified individual, firm, partnership, corporation or combination thereof, acting directly or through a duly authorized representative who legally submits a proposal for the advertised work.

Board of Supervisors: The Coconino County Board of Supervisors acting under the authority of the laws of the State of Arizona.

Bond Issue Project: A project financed from bonds issued by the County pledging credit or a revenue resource.

Bridge: A structure, including supports, erected over a depression or an obstruction, as water, highway, or railway, and having a track or passageway for carrying traffic or other moving loads and having a length measured along the center of roadway of more than 20 feet between undercopings of abutments or extreme ends of openings for multiple boxes.

(Length) The length of a bridge structure is the over-all length measured along the line of survey stationing back to back of backwalls of abutments, if present, otherwise end to end of the bridge floor; but in no case less than the total clear opening of the structure.

(Roadway Width) The clear width measured at right angles to the longitudinal centerline of the bridge between the bottom or curbs or guard walls or in the case of multiple height of curbs, between the bottom of the lower risers.

Building: Any structure built for the support, shelter, or enclosure of persons, animals, chattel or movable property.

Building Code: A regulation adopted by the governing body establishing minimum standards of construction for the protection of the public health, safety, and welfare in terms of measured performance rather than in terms of rigid specification of materials and methods.

Building Official: The words "The Building Official" shall be construed to refer to any employee of Coconino County acting as or under the authority of the County Engineer or the Director of the Coconino County Community Development Department.

Calendar Day: Everyday shown on the calendar.

Call for Bids: The standard forms inviting proposals or bids.

"Careful and Prudent Manner": Means conducting excavation in such a way that when it approaches within twenty-four inches of the underground facility located and marked by the owner or operator, by stakes, paint or in some customary manner the exact location is manually determined, and the uncovered facility is supported and protected.

Change Order: A written order issued by the Engineer to the Contractor to make changes in the work or to perform extra work, and setting forth conditions for payment and/or adjustment in time of completion.

City: A municipal corporation, organized and existing under and by virtue of the laws of the State of Arizona.

Civil Engineer: A Civil Engineer is a person, holding a current license to practice civil engineering in the State of Arizona issued by the Arizona Board of Technical Registration.

Clear Zone: The total roadside border area, starting at the edge of the traveled way, available for safe use by errant vehicles. This area may consist of a shoulder, a recoverable slope, a non-recoverable slope, and/or a clear run-out area. The desired width is dependent upon the traffic volumes and speeds and on the roadside geometry.

County: Coconino County, a political subdivision of the State of Arizona.

County Clerk: The duly authorized person who performs the duties of clerk for the Coconino County Board of Supervisors.

County Engineer: A holder of a valid license to practice engineering in the State of Arizona who is authorized by Coconino County to act as the "County Engineer" or other authorized representative of the County.

Completion Time: The number of calendar days for completion of an act, including authorized time extensions. In case a calendar date of completion is shown in the proposal in lieu of the number of calendar days, the contract shall be completed by that date. The time within which an act is to be done shall be computed by excluding the first and including the last day; and if the last day be Sunday or a legal holiday, that shall be excluded.

Conflicting Utility: An existing utility, shown or not shown on the plans is conflicting when any part of the utility falls within the dimensions of the new installation, such that it would be in physical contact with the new installation.

Construction Plans: A set of plans and specifications prepared, signed, and sealed by an engineer registered in the State of Arizona.

Construction Project: The erection, installation, remodeling, alteration, of durable facilities upon, under, or over the ground. This shall include, but is not limited to buildings, roadways and utility pipes, lines, poles or other structures.

Contingent Bid Item: This is a minor bid item which is likely, but not certain, to occur during the course of work. If the Engineer determines that his work is required, the Contractor will accomplish the work and payment will be made based

on the contingent unit bid price included in the proposal. Since the quality listed in the proposal is primarily for bid comparison, the amount of work required by the Engineer may vary materially from this.

Contact: The written instruction executed by the Contractor and the Contracting Agency by which the Contractor is bound to furnish all labor, equipment, and materials and to perform the work specified, and by which the Contracting Agency is obligated to compensate the Contractor therefor at the prices set forth therein. The Contract Documents are herewith by reference made .

Contract Documents: All the integral documents of the contact, including but not limited to, Call for Bids, Plans, Standard Specifications and Details, Special Provisions, Proposal, Addenda, Performance Bond, Payment Bond, Certificates of Insurance, Ordinance, Contract, and Change Orders.

Contracting Agency: The legal entity that has contracted for the performance of the work or for whom the work is being performed.

Contractor: The individual, firm, partnership, corporation or combination thereof entering into a contract with the Contracting Agency to perform the advertised work.

Coconino County: A political subdivision, organized and existing under and by virtue of the laws of the State of Arizona.

Culvert: Any structure not classified as a bridge, which provides an opening under or adjacent to the roadway.

Days: Unless otherwise designated, days will be understood to mean calendar day.

Design: Any plans created for the purpose of showing proposed alterations to real property when approved.

Emergency: Unforeseen occurrences and combinations of circumstances involving the public welfare or the protection of work already done under the Contact Documents, or which endanger life or property and call for immediate action or remedy.

Engineer: A person licensed to practice Engineering in the State of Arizona.

Engineering or Engineered Plans: Plans, specifications, and associated documents which were created, signed and sealed by a professional licensed in the State of Arizona to practice engineering by the Arizona Board of Technical Registration.

Equipment: (Construction) - All machinery and equipment, together with the necessary supplies for upkeep and maintenance, and also tools and apparatus

necessary for the proper construction and acceptable completion of work. (Installed) - All material or articles used in equipping a facility as furnishings or apparatus to fulfill a functional design.

Extra Work: An item of work not provided for in the contract as awarded, but found essential to the satisfactory completion of the contract within its intended scope.

Flooding: Flooding will consist of the inundation of the entire lift with water, puddled with poles or bars to insure saturation of the entire lift.

Force Account Work: Work done by personnel of the Contracting Agency as in-house work.

Foundation: For buildings or structures, this will be the substructure. For pipe this will be the native material or prepared material on which the pipe rests; normally, this is the bottom grade line of the trench.

Full Depth Pavement: An asphalt concrete pavement structure in which the granular base and sub-base are replaced by proportionate thicknesses of asphalt concrete.

Hazard Mitigation: Reduce the possibility or minimize the effects of disasters or dangers which will affect the community development.

Improvement: Any alteration to real property.

Improvement District Project: A project financed by assessments against the property included in a special assessment district authorized under, or implemented by an act of the legislature of the Sate and/or a procedural ordinance of the County.

Inspector: The County Engineer's authorized representative assigned to make detailed inspections of contract performance.

Jetting: Jetting is the densification of material, using a continuous supply of water, under pressure, transmitted to the material through a rigid pipe of sufficient length to reach the bottom of the lift being densified. In all cases, the entire lift will be completely saturated working from the top to the bottom. In general, compaction by Jetting will not be permitted.

Laboratory: The established materials testing laboratory of the Contracting Agency's Engineering Department, or other laboratories acceptable to and/or authorized by the Engineer to test materials and work involved in the Contact.

Land Division: Real property proposed to be divided into five or fewer parcels on fractional interests (see the Coconino County subdivision ordinance for a more complete definition).

Legal Description: A description of real property prepared and sealed by a land surveyor licensed to practice in the State of Arizona.

Materials: Any substance specified in the project, equipment, and other material used or consumed in the performance of the work.

Median: The portion of a divided highway separating the roadways used by traffic going in opposite directions.

Non Pay Item: An item of work for which no separate payment will be made under the proposal, but which must be included as an incidental cost for payment on an associated item included in the proposal.

Notice of Award: A letter from the City or County Clerk advising the Contractor that he is the successful bidder and the Council or Board of Supervisors has accepted his proposal.

Notice to Proceed: A directive issued by the Engineer, authorizing the Contractor or owner to start work or improvements.

Open Trench: The excavated area shall be considered as open trench until all the aggregate base course for pavement replacement has been placed and compacted or, if outside of a pavement area, until the excavated area is brought to finish grade or natural grade.

Pavement: Any surfacing of streets, alleys, sidewalks, courts, driveways, etc., consisting of mineral aggregate bound into a rigid or semi-rigid mass by a suitable binder such as, but not limited to, portland cement of asphalt cement.

Pavement Structure: The combination of sub-base, base course, and surface course placed on a subgrade to support the traffic load and distribute it to the roadbed.

Pay Item: A detail of work for which separate payments are to be made under the Contact, as specified in the proposal.

Payment Bond: The security provided by the Contractor solely for the protection of claimants, supplying labor and materials to the Contractor of his Sub-Contractor.

Performance Bond: The security provided by the Contractor solely for the protection of the Contracting Agency and conditioned upon the faithful performance of the contract in accordance with the plans, specifications and conditions thereof.

Permit: The license to do construction in public rights-of-way and/or easements; issued by an Agency.

Plans: All approved drawings or reproductions thereof pertaining to work and details therefore to be accepted by Coconino County. All plans must be created by a professional licensed by the Arizona State Board of Technical Registration.

Plant: The Contractor's and/or Sub-Contractor's facilities, including but not limited to small tools and mobile equipment, located on and/or offsite, necessary for preparation of materials and prosecution of work for the project.

Principal: The individual, firm or corporation primarily liable on an obligation, as distinguished from a surety.

Project: A specific coordinated construction and/or improvement similar undertaking identified by a single project number or name.

Proposal: The offer of a bidder on the prescribed form, to perform the work and to furnish the labor and materials at the prices quoted.

Proposal Form: The approved form on which the Contracting Agency requires bids to be prepared and submitted for the work.

Proposal Guarantee: The security furnished with a bid to guarantee that the bidder will enter into the contract if his bid is accepted.

Proposal Pamphlet: The book or pamphlet pertaining to a specific project, containing proposal forms, special provisions and other information necessary for and pertinent to the preparation of the proposal or bid.

Record Drawings: Construction drawings, documents or plans sealed and stamped by a professional registered in the State of Arizona (usually an Engineer or Land Surveyor) which depict the actual improvements made and their actual locations. As built plans are also called and known as "As Builts" "Record Drawings" or "As Constructed".

Referred Documents: On all work authorized by the Contracting Agency, any referenced documents in the specification, i.e., Bulletins, Standards, Rules, Methods of Analysis or test. Codes and specifications of other Agencies, Engineering Societies or Industrial Associations, refer to the Latest Edition thereof, including Amendments, which are in effect and published at the time of Advertising for Bids or the issuing of a permit for the work, unless otherwise stated.

Right-of-Way: A general term denoting land, property, or interest therein, usually in a strip, acquired for or devoted to a street, highway, or other public improvement.

Road: A general term denoting a public way for purposes of vehicular travel, including the entire area within the right-of-way.

Roadside: A general term denoting the area adjoining the outer edge of the roadway. Extensive areas between the roadways of a divided highway may also be considered roadside.

Roadside Development: Those items necessary to the complete roadway which provide for the preservation of landscape materials and features; the rehabilitation and protection against erosion of all areas disturbed by construction through seeding, sodding, mulching and the placing of other ground covers; such suitable planting and other improvements as may increase the effectiveness and enhance the appearance of the roadway.

Roadway: The portion of the right-of-way intended primarily for vehicular traffic, and including all appurtenant structures and other features necessary for proper drainage and protection. Where curbs exist, it is that portion of roadway between the faces of the curbs.

Sewers: Conduits and related appurtenances employed to collect and carry off water and waste matter to a suitable point of final discharge.

Shop Drawings: Drawings or reproduction of drawings, detailing; fabrication and erection of structural elements, falsework and forming for structures, fabrication of reinforcing steel, installed equipment and installation of systems, or any other supplementary plans or similar data which the contractor is required to submit for approval.

Shoulder: The portion of the roadway contiguous with the traveled way for accommodation of stopped vehicles, for emergency of base and surfaces courses.

Sidewalk: That portion of the roadway primarily constructed for the use of pedestrians, also referred to as pedestrian ways and walkways.

Special Provisions: The special conditions, requirements, additions, and/or revisions to the Standard Specifications, applicable to the work, to cover conditions or requirements peculiar to the project under consideration.

Specifications: The descriptions, directions, provisions, and requirements for performing the work as contained in the Contract Documents.

STAFF: Employees of Coconino County.

Standard Details: Uniform detail drawings of structures or devices adopted as Standard Details by the Engineer.

Storm Drain: Any conduit and appurtenance intended for the reception and transfer of storm water.

Street: Streets, avenues, alleys, highways, crossings, lanes, intersections, courts, places, and grounds now open or dedicated or hereafter opened or dedicated to public use and public ways.

Structures: Bridges, culverts, catch basins, drop inlets, retaining walls, cribbing, manholes, endwalls, sewers, service pipes underdrains foundation drains, fences, swimming pools, and other features which may be encountered in the work and not otherwise classed herein.

Sub-base: The lower course of the base of a roadway, immediately below the subgrade.

Subcontractors: Those having direct contracts with the Contractor and those who furnish material worked into a special design according to the Plans and Specifications for the work, but not those who merely furnish material not so worked:

Subdivision: Real property proposed to be divided into six or more parcels or fractional interests (see Coconino County Subdivision Ordinance for a more complete definition).

Subgrade: The supporting structures on which the pavement and its special undercourses rest.

Substructure: All of that part of the structure or building below the bearings of simple and continuous spans, skewbacks of arches and tops of footings of rigid frames, together with the backwalls, wingwalls, and wing protection railings.

Superintendent: The Contractor's authorized representative in responsible charge of the work.

Chapter I

AGENCY CONTROLS AND REVIEWS

QUALIFICATIONS

The majority of work involving construction and/or design will fall under the regulations and authority of the Arizona State Board of Technical Registration for Architects, Engineers, Geologists, Landscape Architects, and Land Surveyors. Plans, drawings, specifications, estimates, legal descriptions and other work produced by non-registrants in these categories will not be accepted or reviewed by Coconino County Staff. All work in these categories must bear the seal and signature of the registrant and conform to the code and rules of the Board of Technical Registration.

Construction of Public Works of the State or any political subdivision thereof shall be executed under the direct supervision of a qualified registrant in the category involved.
See ARS 32-142.

COUNTY

All design and construction in Coconino County whether public or private shall be done in accordance with the principals, practices and standards in the current version of the following publications:

The Coconino County Subdivision Ordinance

The Coconino County Drainage Design Criteria

The Coconino County Engineering Design & Construction Criteria

Other standards which will apply when appropriate shall include but not be limited to the current versions of the following:

The Coconino County Comprehensive Plan

The Arizona Department of Transportation (ADOT) Standards and Specifications

The American Society for Testing Materials (ASTM) Standards and Specifications

The Arizona Department of Environmental Quality (ADEQ) Standards

and Specifications

The Occupational Safety and Health Administration (OSHA) Standards and Specifications

The American Association of State Highways and Transportation Officials (AASHTO) Standards and Specifications

The American Water Works Association Standards (AWWA)

The National Fire Protection Standards

The Uniform Building Code Standards

The Maricopa Association of Governments – Uniform Standard Specifications and Details (MAG Secs)

Standards, Practices, and Rules imposed by other Regulatory Agencies

The County Engineer and/or staff must review and approve all engineering plans, specifications, and documents for public works improvements and private improvements which require County authorization or permits.

All work on property owned or controlled by Coconino County and all work which will be owned by the County upon completion will require permits. Inspections of the construction of public and private improvements by the County and written acceptance of the construction by the County Engineer or designated staff is required for all County permitted work.

STATE

The Arizona Department of Transportation (ADOT) requires that permits be issued by ADOT for any work performed in State rights-of-way.

Arizona Department of Environmental Quality (ADEQ) approval to construct both water and sewer systems must be obtained prior to approval of construction plans by the County Engineer and prior to issuance of County permits.

Arizona Water Commission approval is required for any proposed water system.

Permits from controlling State Agencies will be required prior to the issuance of construction permits by Coconino County

FEDERAL

The U.S. Army Corps of Engineers controls all work affecting “The Waters of the United States” (in general, this means ALL WATER of any nature).

The Environmental Protection Agency controls pollution (noise, air, water, sewage).

Permits from controlling Federal Agencies will be required prior to the issuance of construction permits by Coconino County.

Note: All design construction shall meet and conform to current ADA Standards and Requirements.

UTILITY COMPANIES

Local Utility Companies shall sign the cover sheet of construction or improvement plans. By signing this sheet the utility confirms that they have seen the plans, are aware of the scope of the project, and have identified existing and proposed utilities and their potential conflicts in relation to the project.

The County Engineer shall not approve construction plans until all potentially affected utilities have signed or the Engineer has written corespondence from the utility confirming the receipt of plans. Utilities which will commonly be contacted are cable TV, gas, electric power, telephone, sewer and water.

Chapter II

CONSTRUCTION AND IMPROVEMENT PLANS

GENERAL

Three sets of plans will be required with the first submittal and two sets for any subsequent submittals for plan review, for all projects.

At the time of submittal of plans for private development projects, plan check fees as per current adopted fee schedules shall be paid.

PLANS

Engineering plans are required for construction of any new improvements within existing or proposed public rights-of-way or easements. Engineering plans are required for all subdivisions and most projects requiring review and permit by the County. Plan requirements may be waived by the County Engineer for jobs of a minor nature. Plans shall be prepared by an Engineer registered in the State of Arizona.

REVIEW & RESPONSIBILITY

Prior to issuance of any public works permit for construction, plans shall be reviewed and approved by the County Engineer or his authorized representative. Such review is intended to assure general compliance with County Standards. This review is not intended to assure accuracy of all plan details or assume design responsibilities from the Design Engineer. In the event of plan errors or omissions, County Standards will take precedence over the plans. The final and total responsibility for any design belongs to the Design Engineer – not to the developer, not to the contractor, and not to any or all of the reviewing or permitting agencies. The final and total responsibility for construction and implementation of the design belongs to the property owner and/or developer and no one else. Responsibility is not just a verbal admission – it is an obligation to suffer the consequences of errors. Approval of the plan(s) by the County Engineer or other County Authority does not imply that the County is responsible for or in any way a guarantor of the plans, subsequent construction or economic viability of the project. The Design Engineer is responsible for the correctness and completeness of the plans and associated documents – the property owner and/or developer is responsible for the construction and implementation of the project. The County will not bear any responsibility for the cost of corrections to the plans or extra work resulting from changes which may be required during construction due to errors and/or omissions on the plans. Any difficulties encountered during construction will be resolved by the Developer and/or Design Engineer at their sole expense.

CONTENT

Plans are to meet the minimum requirements set forth in the following sections and must be based on minimum design criteria listed in the sections, dealing with specific items, e.g., grading, streets, etc.

FORMAT

All construction plans (grading, drainage, street, water, sewer) must be submitted in a clear, neat format which conveys all pertinent information at a 1" = 40' scale horizontal, and 1" = 4', vertical, or larger. Overall drawing size shall be 24" x 36". An index sheet to a set of detailed plans in excess of two sheets should be presented.

The design engineer may request a variance for a particular project, where the above plan format criteria are not appropriate. The County Engineer may grant an exception to the format criteria where, in his opinion, it is appropriate.

DRAFTING STANDARDS

1. Symbols to be used should conform to ADOT Drafting Guidelines or other widely accepted, clearly defined set of standard symbols.

2. Standard Drawings must be referred to by number for inclusion as part of plans and in the quantity section.

3. A minimum lettering height of 0.08 inches shall be used on all plans (0.10 inches is easier to read from copies and is encouraged when possible).

4. Direction of north arrow will be determined by stationing. All stationing will read from left to right. To accomplish this, the project should have increasing stationing from west to east or south to north.

5. Stick-on materials, other than Standard Blue-Stake stickers, will not be allowed on plan originals.

COVER SHEET

A cover sheet should be included for each category of construction plans submitted. The cover sheet should include the following when applicable.

1. Concept Approval Note:
   The County approves these plans for concept only. All liability resulting from errors or omissions is the responsibility of the permitte and/or his consultants and employees. Coconino County does not verify or guarantee the measurements, calculations, ownership or conclusions indicated by the creator of these plans.

2. Vicinity Map.

3. Project title.

4. Developer and engineering firm names and addresses.

5. Signature block for County Engineer.

6. Block for Arizona Department of Environmental Quality approval (file number and date) if applicable.

7. Completed signature blocks for representatives from all potentially affected utilities.

8. Applicable Notes.

9. Index of the sheets.

10. List of all regulatory agencies which have been notified and/or have issued permits.

11. Revision dates with descriptions of the revision.

RIGHT-OF-WAY-PLANS

Right-of-way plans shall be submitted for all construction projects involving right-of-way whether public or private. Right-of-way plans shall consist of a title sheet, ownership record sheet, vicinity map, and plan sheets, or be a part of the construction plans. All sheets shall be sealed by a Registered Land Surveyor.

Right-of-way plans are to be used in conjunction with the acquisition and disposal of property and property rights. They shall contain sufficient data to allow them to be used as a sole source for the field location of all public right-of-way and property lines affected by the right-of-way changes shown on the plans. Except as authorized otherwise, they shall be based upon a previously recorded record of survey drawing prepared for the given project.

For those projects where new right-of-way is not required, the existing right-of-way location and dimensions will still be needed for roadway design, except as authorized otherwise. The description of the existing right-of-way shall be based upon a result of survey prepared for the given project and shall be shown on the construction plans.

Right-of-way plans shall show:

1. Right-of-way control and monument physical description.
2. All existing and proposed right-of-way limit lines.

3. Appropriate ties to intersecting property lines and changes in right-of-way width.

4. Any new or existing easements of record, either temporary or permanent.

5. For each parcel to be acquired:

    a. A parcel identification number (Assessor's parcel #).

    b. The property ownership lines.

    c. The County Recorder's numbers for affected parcels including all existing right-of-way and easements.

    d. The area in square feet or acres of the part to be taken and of each remainder of a partial taking.

    e. Bearings and distances around the perimeter of all takings.

6. All section lines shall be shown with bearings and distances.

7. Thorough descriptions of all sectional control.

8. Basis of bearings relative to a recorded instrument or established by field surveying methods.

The size, form and arrangement of right-of-way plans shall conform to the general requirements for construction plans and should contain sufficient dimensional and angular data to permit ready identification and correlation with the legal descriptions of all parcels.

For all acquisitions, an Ownership Record shall be prepared and shall show the name of owner, brief description of take, and area of each parcel of land affected. It shall be prepared in uniform order with each parcel number being in numerical sequence. The Ownership Record shall contain the following:

1. Existing parcels which are split shall be assigned a discrete identification number for reference purposes.

2. County Recording Number – Docket, Page; Book, Map; etc.

3. Description – a brief description of that part of the parcel being affected.

4. Parcel Area – area of the newly created right-of-way or easement; area may be shown in acres unless so small that a fractional part of an acre would be deceiving.

5. Remainder – area of the parcel remaining after the right-of-way or easement has been taken from the total parcel.

6. Sheet Number – a number indicating the sheet on which the parcel can be located.

A vicinity map showing the project and its relationship to the surrounding area shall be shown.

CONSTRUCTION

The following information is generally required for each construction plan sheet:

1. North arrow.

2. Horizontal control points and stationing.

3. Temporary benchmarks (T.B.M.'s) and elevations. Plans shall also indicate the benchmark and the elevation utilized in establishing the T.B.M.

4. Property lines, easement lines, and right-of-way limits.

5. Street names, lot numbers and subdivision names.

6. Dimensions of improvements shown measured from property lines or centerlines.

7. Stationing along centerline and ties to property lines.

8. The signed seal of the professional engineer.

9. Title and revision block.

10. Legend identifying symbols and abbreviations.

11. All grading limits, including top of slope and toe of slope locations and slope gradients if separate grading plans are not required.

12. Location and gradients of all swales and flow lines if separate grading plans are not required.

13. Roadway and drainage cross-sections including cross slopes and right-of-way and easement limits located relative to the proposed improvements. The specific stationing required for cross sections may be specified by the County Engineer.

14. Blue Stake Sticker.

15. Accurate location per Bluestake of all proposed and existing utilities.

16. Coordinates shall be shown for points on at least one sheet of the construction/improvement drawings which depict rights-of-way, easements, or property boundaries. All angle points, survey control points, and curve pc's pi's, and pt's for boundaries, rights-of-way and easements for the entire project shall have coordinates provided. In addition coordinates should be provided for proposed construction features and utilities in sufficient quantity to define locations. The preferred method of coordinate depiction is to print a point number next to each point and a corresponding coordinate table for the points shown on individual sheets. Coordinates shall display as many significant figures as are required to reproduce the bearing and distance annotation on the sheet and/or bearings and distances shown on other project documents.

QUANTITIES

Each set of plans is to have a breakdown of material quantities estimated for construction of the job. The breakdown must indicate the applicable Standard Drawing number and be in a form suitable for bidding and ordering. Plan approval by the County Engineer does not extend to material quantities shown on the plans. An engineer's estimate of the cost of constructing the improvements on the plans shall be submitted on separate 8 ½" x 11" sheets.

RECORD DRAWINGS (AS-BUILT PLANS)

Record Drawings shall be produced for all construction on publicly owned or publicly controlled property including easements and rights-of-way. Record Drawings shall be sealed and stamped by an engineer or land surveyor registered in Arizona. "Red lined" or Hand Annotated paper copy reproductions will not be accepted. Record Drawings shall be submitted on a high quality transparent mylar medium. These plans shall be titled or prominently stamped "AS Built" or "Record Drawings" or "As Constructed". Electronic files shall also be furnished for the project.

FINAL PLAN SUBMITTAL

Upon approval of the construction plans, but prior to the issuance of a permit for construction, 1 set of plan originals shall be submitted to the County for signatures. One signed original set will be returned to the Consultant for their records. Note: It may be possible to combine the various types of plans (i.e. grading plans, ROW plans, street plans, etc.) on some projects. Please discuss this with the County Engineer prior to generating the plans.

The Consultant will then provide the County with 2 complete copies of plan sets prior to the issuance of construction permits.

GRADING AND DRAINAGE PLANS

Grading plans shall meet all requirements of Chapter VI Grading and Excavation. Applicable supporting soils analysis and drainage studies may be required. Any excavation or embankment exceeding 50 cubic yards will require a grading plan and grading permit. When a soils report is submitted, it should be referenced on the grading plans by firm, project number, and date.

A drainage plan is required which shows the direction and method of conveying drainage waters around or through the development. Each conveyance must be shown on the plan and must be adequately sized to handle calculated runoff. Conveyances may be street gutters, ditches or channels, or storm sewers or culverts. Any necessary channel linings shall be shown on the construction plans. Design flow as well as the hydraulic capacity, shall be shown for each structure and conveyance.

A profile of all drainage structures, channels and conveyances showing slope, inlet and outlet invert elevations, existing and proposed grades, and proposed utility crossings and vertical clearances shall be shown. Typical trench details shall be shown where applicable

Calculations, methods and techniques, and formats used in the drainage plans must conform to the Coconino County Drainage Design criteria.

GRADING PLAN PRESENTATION

In general grading permits are required when cuts or fills exceed 50 cubic yards and/or depths of fill or cuts exceed two feet.

Two sets of approved grading plans shall be submitted with all grading permit applications. As a minimum, the grading plan shall show the following information:

1. Clearly defined original contours and final contours.

2. Clear delineation of the limits of cut and fill slopes including top and toe slopes relative to adjacent property lines and proposed improvements.

3. Proposed grades of streets, slopes, drainage ways, parking lots and driveways.

4. Flood Plain and Floodway Delineation where applicable.

5. Other details, as required, to clarify the plan.

6. Seal of design engineer.

7. Grading plans shall meet all requirements of the Coconino County Drainage Design Criteria.

8. Coconino County may require re-vegitation for any grading. If re-vegitation is required the type and extent shall be shown on the grading plans and titled "Erosion Control". Erosion Control plans must conform to current NPDES requirements.

WATER AND SEWER PLANS

All Water and Sewer Plans must receive appropriate permits and conform to AAC Title 18 Chapter 9 prior to County issuance of grading permit.

A benchmark location (temporary benchmarks may be acceptable) and elevations is to be established in the field and included on each plan sheet.

Utility main lines and service lines must be located and dimensioned with respect to property lines, easement lines, and other established points. Stationing must be clear and correlated to profiles and established points of survey. Sufficient elevation information must be shown to allow visualization in three dimensions of utilities, streets, and lots. Typical trench details shall be shown on the plans.

The cover sheet or second sheet with a master utility plan at no smaller than 1" = 100' shall be in the final construction plans, showing the limits of each plan sheet, street outlines and locations of all valves, fire hydrants, blow-offs, and manholes.

Existing Utilities

All known existing utilities or other pertinent structures are to be shown on the plans. Where crossings of underground utilities occur, vertical separations need to be shown. If any utility company imposes special conditions or precautions concerning their utility, notation of those instructions shall be included on the plans. Accurate elevation and alignment of all utilities shall be shown on the plans. Potholing shall be utilized in determining utility elevations and alignment if necessary.

Sewer Plans

Sewer Plans are to meet criteria of Arizona Department of Environmental Quality and AAC Title 18 Chapter 9. Plans and profiles shall be provided which adequately show all manhole stationing, sewer sizes, manhole invert and rim elevations, and length of reach and grades of lines. Stations and dimensions of sewer services are to be shown to each lot. A plan layout of waterlines is to be shown on the sewer plan with horizontal distances to waterlines shown. Waterline crossings shall be shown in the sewer profile.

Water Plans

Water Plans are to meet criteria of AAC Title 18 Chapter 9. Water plans may be presented with sewer plans.

Plans are to show water pipe class and types of materials, sizes, pressure zones, fittings, air relief valves, valves and fire hydrants, and any other special information required for clarity. Elevations or profiles of water lines extending into older unimproved streets may be required if depth of water lines is critical to future or planned development. Waterline profiles shall be included wherever waterline depth is different than the planned development. Waterline profiles shall be included wherever waterline depth is different than the typical standard depth and wherever necessary to clarify clearances to existing or proposed facilities. Water lines of 16" and larger shall be profiled in all cases. A plan layout of sewer lines is to be shown on the water plans, with horizontal distances to sewer line shown. A detail showing locations of water meters within rights of way or public utility easements is to be included.

STREET PLANS

Layout

Street plans are to conform to the layout of the approved preliminary plat, previously recorded plats or to recorded right-of-way documents and easements, and the street design criteria in this document.

Plan Presentation

Plans, profiles and typical cross-sections are required which contain the following minimum information:

Plans:

1. Street Names.

2. Lateral dimensions of streets and rights-of-way, including all pertinent survey data and curb return data.

3. Location of existing and proposed utilities and existing streets to be joined.

4. Drainage structures, including cross gutters, culverts, catch basins, or similar items. Distinguish between existing drainage structures and those proposed. Show a positive outlet for all drainage and any effects on the downstream property.

5. Curb, gutter, sidewalks, asphalt structures and ditches.

6. Benchmarks used.

7. New traffic control devices, all existing traffic control devices within the area of the project, and changes in traffic control devices in the vicinity of the project which are required as a result of the project.

8. The top and toe of slope for both cuts and fills.

9. Slopes for both cuts and fills.

10. All curve data shown on the plans shall show a central angle, radius, length of arc, and tangent.

11. Survey monument installation shall be indicated on the plans. Appropriate places are street intersections, P.C.'s, P.I.'s, P.T.'s, section corners, sixteenth corners, and subdivision corners if applicable in the streets. Survey monument locations and physical description shall be shown for both control and proposed monuments.

12. Additional information needed to clarify plans or deal with specific conditions.

13. Blue Stake sticker are required on all sheets.

Profiles:

1. Benchmarks, including description of location and elevation. Source of vertical datum shall be shown. This source benchmark shall be noted on plans.

2. Existing and finished grade profiles. Triple profiles of centerline and ditch lines, are required. The presentation must clearly show and distinguish existing profiles and other profile information.

3. Finished elevations, including PVC, PI, and PVT of vertical curves, intersection points, and all other points needed for good vertical control of construction.

4. Slopes and vertical curve lengths.

5. Drainage structures and utilities crossed.

6. Extension of profile a minimum of 200 feet past the end of the improvement project or as required to insure that design is compatible with future extension or existing conditions.

7. Consistent stationing throughout the plans.

8. Additional information needed to clarify profiles or deal with special conditions.

Cross-Sections:

1. Typical cross-sections. A typical cross-section is needed for each condition encountered and should be clearly identified as to where it is applicable. Cross-section intervals may be specified by the County Engineer. Cross-sections will show both existing grade and proposed grades for the structural section and the proposed road template.

2. Materials and thickness, including select material, aggregate base, prime coat, asphaltic concrete, chip seal coat, cure and gutter, and sidewalk, with notation of the engineering firm preparing the soils report and that report number. The specification and type of material shall be stated. Under-drains may be required if deemed necessary.

3. Horizontal dimensions to all key points.

4. Cross slopes (maximum and minimum if cross slope varies).

5. Fore slopes and back slopes on ditches, cuts and fills.

6. Parkway conditions. Maximum and minimum slopes are to be shown for cuts, fills, and side hill conditions. Any side ditches or other special conditions are to be shown.

7. Shall show right-of-way widths, relation to centerline, and shall identify by name, the street to which it is applicable.

8. Identify limits of applicability by station if necessary.

9. Shall show typical location of traffic signals, signs, street lights, fire hydrants, etc.

GENERAL NOTES

The following notes are to appear on applicable plans:

1. Approval of these plans by the County Engineer is for a one-year period, subsequent to the date of approval. If construction work is not started within the one-year period, or has been discontinued for any reason for longer than one year, the plans shall be resubmitted for review and re-approval.

2. Plan review by the County does not extend to material quantities shown on the plans.

3. A encroachment permit, issued by the Public Works Department is required for all work in County rights-of-way or easements. For construction of any improvements a grading permit will be required.

4. The County shall be notified forty-eight (48) hours prior to beginning different phases of construction so that County Inspectors may be scheduled.

5. All materials and workmanship shall comply with the current “Coconino County Engineering Design and Construction Criteria” and the current “M.A.G Uniform Standard specifications and Details for Public Works Construction”, or other specifications approved by the County Engineer and with generally accepted good construction practice. All work and materials which do not conform to the standards and specifications are subject to removal and replacement at the contractor’s expense.

6. Any work performed without the knowledge and approval of the County Engineer or his authorized representative, is subject to removal and replacement at the contractor’s expense.

7. The County Engineer or authorized representative may suspend the work by written notice when, in their judgment, progress is unsatisfactory, work being done is unauthorized or defective, weather conditions are unsuitable, or there is danger to the public health or safety.

8. The County Engineer may order any or all materials used in the work to be tested according to the American Association of State Highway and Transportation Officials (AASHTO) and the American Society for Testing and Materials (ASTM) Standards. The Contractor shall, at his expense, supply all samples required for testing or supply test reports by a certified materials laboratory.

9. Local Fire Department, County Engineering Division and other emergency responders approval is required for obstruction of access or water system shutdown – submission of traffic control plans are required.

10. The Contractor shall be responsible for maintenance of the streets and of partially completed portions of the work until final acceptance of the work. Any roads required to be closed for the construction activity shall be reopened within a reasonable time or upon order of County Engineer. The regulation and control of this traffic shall be as directed by the County Engineer or his authorized representative.

11. Approval of a portion of the work in progress does not guarantee its final acceptance. Testing and evaluation may continue until written final acceptance of a complete workable unit. Any defects which appear in the work within one year from the date of acceptance and which are due to improper workmanship or inferior materials supplied shall be corrected by or at the expense of the owner/developer or the contractor.

12. Acceptance of completed public improvements will not be given until defective or unauthorized work is removed, and final clean-up is complete.

13. Location of underground utilities before work is begun is to be accomplished in accordance with ARS 40-361-22.

14. If work is done on private property in relation to a project constructed under these standards, the contractor will provide the County with written authorization from the property owner to do so.

15. The establishment and use of temporary construction yards shall require written authorization from the County Public Works Department.

Water and Sewer Notes (water and sewer plans):

1. Rough grading shall be completed within one-tenth of a foot of plan grade prior to installation of underground utilities.

2. No trench shall be filled with bedding material or backfill until the excavation and pipe laying, respectively, have been approved by the County Engineer's authorized representative.

3. A water pressure test is required of all water lines and a hydrostatic or air test is required of all sewer lines. Tests are to be conducted after backfilling is complete and compacted. All testing will conform to standards established by the responsible utility.

4. Water line disinfection is to be accomplished as outlined in Arizona Department of Environmental Quality (A.D.E.Q.) "Bulletin No. 8" or per requirements of the local utility.

5. In order to protect public water systems from possible contamination, a water main shall not:

    a. Infringe upon an area which is within six feet of either side of a sewer main and shall not be below, at the same level as, or less than two feet above the top of the sewer main, unless extra protection is provided. Extra protection shall consist of constructing the sewer main with mechanical joint ductile iron pipe or with slip-joint ductile iron pipe. If joint restraint is provided it shall consist of encasing both the water and sewer mains in at least six inches of concrete.

    b. Under any circumstances, infringe upon an area which is within two feet of either side of or two feet below the sewer main.

    No water pipe shall pass through, or come into contact with any part of a sewer manhole. The minimum horizontal separation between water mains and manholes shall be six feet, measured from the center of the manhole.

The minimum separation between force mains or pressure sewers and water mains shall be two feet vertically and six feet horizontally under all conditions. Where a sewer force main crosses above a water line, or less than six feet below it, the sewer main shall be encased in at least six inches of concrete for 10 feet on either side of the water main.

All distances are measured perpendicularly from the outside of the sewer main to the outside of the water main. These separation requirements do not apply to building plumbing or individual house service connections.

6. No water settling of trench fill material is allowed.

7. All water and sewer design and construction shall conform to the current Arizona Department of Environmental Quality (A.D.E.Q.) requirements. When A.D.E.Q. requirements are in conflict with these standards, the more restrictive shall apply.

8. Tracer wires and tapes shall be installed prior to testing the water or sewer main.

Paving Notes (Paving Plans):

1. Exact point of matching termination and overlay, if necessary, shall be determined in the field by the County Engineer or his authorized representative.

2. No job will be considered complete until:

   a. All curbs, pavements, sidewalks, ditches, and manholes have been cleaned of all dirt and debris.

   b. Survey monuments are installed and stamped.

   c. All frames, covers, and valve boxes are adjusted to grade.

3. No paving construction shall be started until all utility lines under proposed paved area are completed and approved.

4. Asphalt shall not be placed before base course has been approved and base course will not be placed until subgrade has been approved by the County Engineer or his authorized representative.

5. The location of all water valves, fire hydrants, and manholes must at all times during construction be referenced and made accessible to the County.

6. Utility facilities in conflict with this work will be relocated by the permittee or the utility owner. This activity shall be coordinated with the owner of the utility to prevent any unnecessary interruption of service to existing customers.

7. Existing street and traffic signs will be maintained during construction and relocated by the permittee as directed by the County Engineer or his authorized representative.

8. A prime coat is not required unless so specified in the soils and pavement report and/or shown on the plans.

Chapter III

SURVEYING AND MAPPING

QUALIFICATIONS

All surveying and mapping activities associated with projects which will be reviewed and permitted by Coconino County shall comply with the rules and specifications of the State Board of Technical Registration. In general this means that these activities must be performed by or under the responsible charge of a Land Surveyor or registrant in a category appropriate to the activity.

SURVEYING

1. All projects which will be reviewed and permitted by Coconino County and which will transfer ownership or other rights to real property shall have a survey performed prior to submittals to the County. The survey shall be performed, signed and sealed by a Land Surveyor registered in the State of Arizona. The results of survey shall be included in the documents submitted to the County for review and permit.

2. Surveys performed for projects which will be reviewed and permitted by Coconino County will meet the minimum specifications for accuracy and precision required by the rules for Land Surveyors imposed by the State Board of Technical Registration, however, Coconino County may, at its discretion, impose additional or higher standards for any project.

3. Coconino County does not choose to impose any monument specifications, as to physical type, other than those required by State Law. However, all monuments noted on drawings or other documents submitted for any project which will be reviewed and permitted by Coconino County must have associated physical descriptions of the monuments shown on the document.

4. Coconino County will not review and approve projects containing “new legal descriptions” created by non-registrants. “New legal descriptions”, in this paragraph, means those created specifically for a project which Coconino County is being asked to review and permit. “New legal descriptions” must be signed and sealed by a Land Surveyor registered in the State of Arizona.

5. If coordinates generated by a Global Positioning System (GPS) are included on drawings or other documents, the geodetic coordinates (Latitude Longitude and ellipsoid height) shall also be shown and the GPS equipment manufacturers estimated positional accuracy (for the methods used) noted for each point.

6. Coordinates shall be shown for points on at least one sheet of the construction/improvement drawings which depict rights-of-way, easements, or property boundaries. All angle points, survey control points, and curve pc's pi's, and pt's for boundaries, rights-of-way and easements for the entire project shall have coordinates provided. In addition coordinates should be provided for proposed construction features and utilities in sufficient quantity to define locations. The preferred method of coordinate depiction is to print a point number next to each point and a corresponding coordinate table for the points shown on individual sheets. Coordinates shall display as many significant figures as are required to reproduce the bearing and distance annotation on the sheet and/or bearings and distances shown on other project documents.

7. Benchmarks for the project shall be shown on one or more sheets of the construction/improvement drawings. Both the location and physical description of the monument shall be shown along with the reference datum.

MAPPING

1. All maps which are created for projects which will be reviewed and permitted by Coconino County and which depict real property boundaries or boundaries of real property rights will be produced, signed and sealed by a Land Surveyor registered in the State of Arizona.

2. Maps which are intended to be recorded may be submitted to the Public Works Department in the sizes and formats currently acceptable to the County Recorders office. Drawings such as construction/improvement plans, not for recordation, should be submitted on 24"x36" paper at a scale of 1"= 40' or larger – or if this is inappropriate, utilizing a scale agreed upon between the developer and Public Works Staff.

3. If topography is included the name and contact information of the provider (if different from the Land Surveyor) shall be shown.

4. The minimum standards for topographic information shall be:

    a. Horizontal: Ninety percent of all planimetric features shall be within 1/40 inch of their true relative position and none shall have a positional error exceeding 1/20 inch.

    b. Vertical: Ninety percent of any spot elevations determined from contours shall be correct to plus or minus ½ the contour interval and none shall exceed one contour interval. Spot elevations shown by the provider shall all be correct within ½ of the contour interval and Ninety percent shall be correct to plus or minus ¼ the contour interval.

    c. Topography shall be shown at least 100 feet or further outside of the project limits.

d. 7&1/2 minute quadrangles will not be accepted as topographic data for most projects. In general, the maximum acceptable contour interval for engineering design work will be two feet and one foot will usually be recommended.

Acceptance or approval of construction/improvement plans and subsequent issue of grading, construction or other letters of approval or permits does not constitute or imply any check or verification or guarantee of the accuracy or precision of the surveying or mapping associated with these plans. County Staff checks for conformance with accepted practice, conformance with existing regulations, and conformance with agency policies. The County does not check or verify or guarantee the ownership, measurements or conclusions indicated by the creator of these plans.

Chapter IV

DESIGN CRITERIA

APPROVAL

The County Engineer is Coconino County's direct representative in matters relating to engineering and construction activities. Acceptance and approval of the project by the county for both design and construction shall be contingent upon the recommendation of the County Engineer.

The matters with which the County Engineer shall exercise decision making authority include but shall not be limited to:

- Interpretation of plans and specifications
- Interpretation of standards
- Interpretation of acceptable practices
- Acceptability of materials
- Acceptability of workmanship
- Conformance of construction with plans and specifications
- Conformance of construction with regulations and policies
- Mitigation of hazards
- Questions of safety
- Traffic control issues

Construction may only occur after the construction plans have been approved by the County Engineer and all required permits have been issued by regulatory agencies. The approval of construction plans shall be valid for a time period of one (1) year from the date of approval by the County Engineer. Plans not under construction within this period must be resubmitted and approved again by the County.

GENERAL CONSIDERATIONS

The **current versions** of the following publications shall be utilized and/or accepted as standard criteria for engineering design in Coconino County. The County strongly encourages conformance with the standards, specifications, and practices describe in these publications. Deviations from these standards must be authorized in writing by the County Engineer.

The Uniform Standard Specifications for Public Works Construction
better known as *"M.A.G Specs"*
Published by the Maricopa Association of Governments

Standard Specifications for Road and Bridge Construction
better known as *"ADOT Specs"*
Published by the Department of Transportation of the State of Arizona

A Policy on Geometric Design of Highways and Streets
better known as *"AASHTO Specs"*
Published by the American Association of State Highway and Transportation Officials

Manual on Uniform Traffic Control Devices
better known as *"MUTCD"*
Published by the U.S. Department of Transportation
Federal Highway Administration.

In addition, the ***current versions*** of the following publications are regulatory standards imposed by Coconino County:

The Coconino County Subdivision Ordinance

The Coconino County Drainage Design Criteria Manual

Other standards which will apply, when appropriate, shall include but not be limited to the current versions of the following:

The Coconino County Comprehensive Plan

Other Arizona Department of Transportation (ADOT) Standards and Specifications

The American Society for Testing Materials (ASTM) Standards and Specification

The Arizona Department of Environmental Quality (ADEQ) Standards and Specifications

The Occupational Safety and Health Administration (OSHA) Standards and Specifications

Other American Association of State Highways and Transportation Officials (AASHTO) Standards and Specifications

The American Water Works Association Standards (AWWA)

The National Fire Protection Standards

The Uniform Building Code Standards

Standards, Practices, and rules imposed by other Regulatory Agencies

The County Engineer must review and approve all engineering plans, specifications, and documents for public works improvements and private improvements which require county authorization or permits.

All work on property owned or controlled by Coconino County, and all work which will be owned by the County upon completion, will require permits. Inspection of the construction of public and private improvements by the County, and written acceptance of the construction by the County Engineer, is required for all County permitted work.

ENVIRONMENTAL ANALYSIS & MITIGATION

In general, the environmental process will include:

- An inventory of the project and surrounding area
- Contact and coordination with regulatory agencies
- Identification of potential problems and impacted environment
- Preparation of appropriate environmental documents (1st draft)
- Public participation
- Preparation of appropriate environmental documents (final)
- Mitigation of hazards

The Project Sponser will have the responsibility for preparation of environmental documents for public works projects. Preparation of environmental documents for projects which are not or will not become publicly owned will be the responsibility of the developer.

Coconino County will require projects to comply with all requirements of the National Environmental Policy Act (NEPA), as well as, all other Federal, State, and local regulations. Coconino County shall require such compliance of all parties, both public and private, working on public works.

DRAINAGE

Both hydraulic and hydrologic designs may be required for construction/improvement projects which will be approved or permitted by Coconino County. Hydrologic and hydraulic design shall be based on and conform to the standards, specifications, and recommendations in the ***Coconino County Drainage Design Criteria*** Manual. Drainage design must also comply with all applicable Federal, State, and local regulations.

A drainage design report will be included in all projects which require hydrologic designs. The drainage report should be submitted with the construction/improvement plans and documents. The report will, at a minimum, meet the requirements in the Coconino County Drainage Design Criteria

Drainage designs, reports and documentation must be signed and sealed by an engineer registered in the State of Arizona and must be reviewed and accepted by the County Engineer as part of the County acceptance and permit process for the project.

Note: The typical ditches shown in the Coconino County Road Design Standards are the minimums which will be accepted by the County under any conditions and may not be adequate for drainage across some topography. It is the responsibility of the design engineer to insure adequate capacity of the drainage system - see Coconino County's *"Drainage Design Criteria"*.

FIRE SAFETY

The minimum fire safety requirements for residential areas in Coconino County shall be the current Uniform Fire Code and/or National Fire Protection Standards. Hydrants installed on projects requiring permits from the County shall conform to American Water Works Association hydrant standard C-502 and shall follow the installation requirements of standard M-17. Systems with hydrants shall be capable of providing a minimum volume of 1000 gallons per minute while maintaining a minimum residual pressure of 20 psi. Waivers to these requirements must be obtained from both the County Engineer and he Director of Community Development. Additional or more restrictive requirements may be imposed by the County Engineer, the County Board of Supervisors or the local fire district for specific projects.

MAIL BOXES

Mailboxes and appurtenances such as newspaper boxes and mounting posts often constitute a safety hazard. When mailboxes or their locations must be included in the design process, the designer is advised to consult AASHTO's *"A Guide to Erecting Mailboxes on Highways"*.

STREETS/ROADS

Access: Access to County roads is regulated by the Coconino County Pubic Works Department. All construction designed to connect to County or special districts roads must be authorized by a valid encroachment permit.

Coconino County is currently in the process of drafting standards for access management (driveways, intersections, turn-lanes, etc.) on County-maintained roads. Upon completion, the document will provide guidelines for planning, reviewing, controlling, and developing safe and efficient access to/from County roads.

Aggregate Base Course: Volcanic cinder materials will ***NOT*** be accepted as ABC on roads in Coconino County whether paved or not.

Clear Zones: Roads with design speeds below 35 mph shall have a minimum clear zone width of 10 feet. Roads with design speeds above 35 mph should have clear zones sized according to the criteria in AASHTO's Roadside Design Guide.

Ditches: The typical ditches shown in the Coconino County Road Design Standards are the minimums which will be accepted by the County under any conditions and may not be adequate for drainage across some topography. It is the responsibility of the Design Engineer to insure adequate capacity of the drainage system - see Coconino County's *"Drainage Design Criteria"*.

Engineering: Engineering criteria should be developed from technical publications accepted by Coconino County such as *AASHTO's "A Policy on Geometric Design of Highways and Streets"* or M.A.G or ADOT Specs.

General Design: Functional Classifications and general design features such as street widths, right-of-way required, minimum radii and maximum cul-de-sac lengths are controlled by the **Coconino County Road Design Standards**.

Handrails: Handrails shall be installed for protection of pedestrians when slopes are 2:1 or steeper within 3 feet of sidewalk or other walkway and the embankment height exceeds 3 feet.

Life Span: In general, Coconino County's roads should be designed for a service life of 20 years or more.

Railroad Crossings:

- Railroad-highway grade crossings should ideally be a right angle to the rails.
- Pavement surfaces at railroad crossings shall be designed, constructed, and maintained to permit safe, smooth crossings for all roadway users. If the crossing angle is less than approximately 45 degrees, consideration should be given to widening the outside lane, shoulder, or bicycle lane to allow bicyclists adequate room to cross the tracks at a right angle. Where this is not possible, commercially available compressed flange-way fillers can enhance bicyclist' safety. If cost is prohibitive, these need only be installed across the bike lane portion of the total pavement width.
- Warning signs and pavement markings should be installed in accordance with the Manual on Uniform Traffic Control Devices.
- Permits from the railroad must be issued prior to County approvals or acceptance.

Shoulders: In general, shoulder widths in Coconino County will be a minimum of 2 feet - shoulder slopes shall match the cross-slope of the adjoining travel lane.

Slopes: Typical cut and fill slopes are specified in the Coconino County Road Design Standards. See AASHTO's Roadside Design Guide for non-typical cases.

Structural Sections: In general, the structural section of any street will be based on projected loads and traffic volumes and will be specified by the Design Engineer. However, no section will be accepted or permitted which has less than six inches of aggregate base course. No pavement will be accepted or permitted which has a thickness less than 3 inches. ***Volcanic cinder materials will not be accepted*** as aggregate base course (whether for the road surface or under pavements).

Vehicle Barriers: The necessity for the installation of roadside barriers shall be determined from the criteria in AASHTO's Roadside Design Guide. In general, barriers shall be installed in accordance with current ADOT specifications.

DRIVEWAYS

A driveway is any access constructed within the public right-of-way, connecting the public right-of-way with adjacent property. A driveway may not block access to streets, roads, other properties, sidewalks or other driveways.

Large graded or paved areas which function as the end of driveways and which allow drivers to enter or leave the traveled way at random locations will be discouraged.

Access to State Highways is regulated by the Arizona Department of Transportation (ADOT). Encroachment permits for access to State Highways must be obtained from ADOT. Access to incorporated cities is regulated by the city.

Access to roads and streets owned and maintained by Coconino County is regulated by the Coconino County Public Works Department. All construction designed to connect to County roads must be authorized by a valid encroachment permit from the County. Existing accesses onto County roads, even if not in use or abandoned, may not be altered or reconstructed without encroachment permit issued by Coconino County.

All new construction requiring access to a County road and all alterations of existing accesses to County roads require encroachment permits. The design, number and location of accesses to County roads must be approved by the Public Works Department. The number of accesses should be kept to a minimum when possible. No accesses will be permitted without a site plan. When any of the following conditions occur a new encroachment permit may be required:

- New construction on a property.
- Changes to type of business, significant expansions, or changes in zoning.
- Property divisions.
- Changes in use which cause traffic flow to be impeded or traffic delays.
- Relocations or realignments to existing driveways.
- Changes in the type of traffic utilizing the access - usually changes to larger heavier vehicles as a substantial portion of the traffic.

The number of driveways is a function of the size and use of the property. In general, most parcels will be limited to one two-way or two one-way driveways. Where a property might access more than one road, the County may decide to limit access to the road with the lowest traffic volumes. Temporary access may occasionally be granted to undeveloped property for preliminary site access or construction.

The spacing between adjacent driveways must be adequate to allow vehicles to safely queue, accelerate, decelerate and cross lanes without excessive interference with through traffic or other driveways. The County Engineer will exercise final authority with regard to acceptable spacing.

In general, driveways will not be permitted within 25 feet of a guardrail end, within 100 feet of a bridge, or closer than 15 feet to fire hydrants, utility poles, utility pedestals or other hazards. In general, driveways will not be permitted within 50 feet of street intersections - in no case will driveways be permitted which intersect the arc of a curve which connects intersecting streets. Driveways will not be permitted which will require backing maneuvers in the public right-of-way. This backing limitation shall not apply to single family residential development unless required by the County Engineer.

The following graphic illustrates the vertical alignment requirements for driveways entering County right-of-way

.

GROUND CLEARANCE DIMENSIONS (NO SCALE)

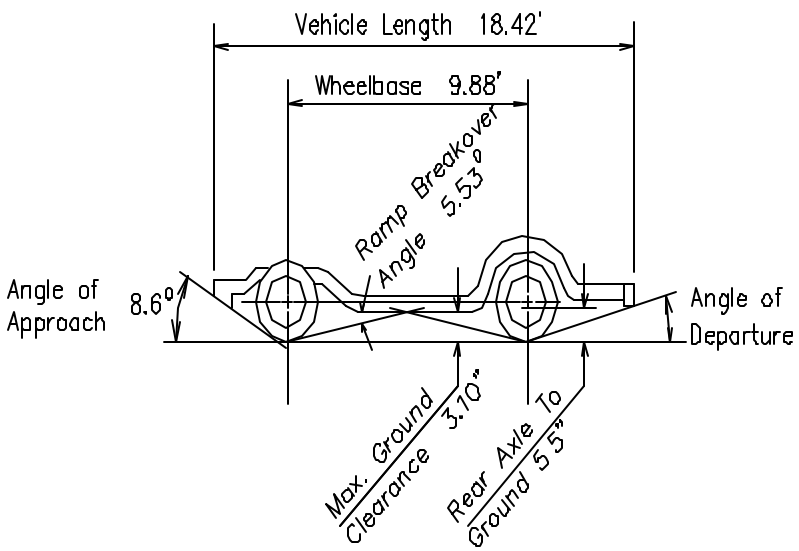

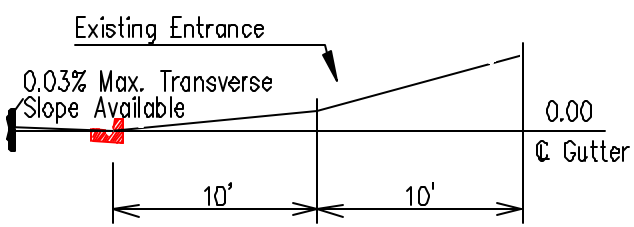

NOTES

1. If the sum of the street crown slope, normally a negitive slope of 1.146 degrees (−0.02%), and the positive slope of the driveway is equal to or exceeds the angle of departure, 8.3 degrees (0.146%), the driveway must be redesigned to a positive slope of not more than 6 degrees (0.105%).

2. Additional increases in the positive slope may be made at ten (10) foot intervals. Each change cannot equal or exceed the angle of departure, 8.3 degrees (0.146%).

3. Changes from a positive slope to a negative slope cannot equal or exceed the breakover angle of 5.53 degrees (0.097%).

4. When making a change from a negative slope to a positive slope, the sum of the two slopes cannot equal or exceed the angle of departure, 8.3 degrees (0.146%).

These dimensions are from the 1982 Motor Vehicle Manufactures Association Publication. Copies may be obtained from the Technical Affairs Division, Motor Vehicle Manufactures Assiciation, 300 New Center Building, Detroit Mi. 48202.

TRAFFIC DESIGN

The primary consideration for the design of roads and streets in Coconino County should be their ability to safely and efficiently handle both present and anticipated traffic volumes. In general, roadways should be designed to accommodate the anticipated volumes at "build out" for the contributing area. Build out will be the largest number of homes and other structures either allowed by current planning regulations or currently projected by the County planning staff for a future date - not to exceed 20 years. Should the build out traffic volumes appear to be unrealistic (in the judgment of the County Engineer) the County Engineer will specify the traffic volumes to be used in the design process.

In general, the standards and specifications used for traffic design should be takes from the Institute of Transportation Engineers' *"Recommended Guidelines for Subdivision Streets"* and/or AASHTO Specs. Design of traffic control devices (signs, markings, signals, Etc.) shall conform to the standards and recommendations in the **Manual on Uniform Traffic Control Devices** (MUTCD).

Reports submitted in support of traffic designs shall include the following:

- A site map showing types of land use in the affected area, existing roads, and contributing sites or structures.
- Current ADT's for existing roads.
- Future projected ADT's for build out or final development stage.
- A.M./P.M. peak hour turning volumes (existing and projected).
- Capacity analysis (after construction) of both the project and all potentially affected streets within one mile of the project boundaries or other distance specified by the County Engineer.

Reports, plans and other documents submitted to Coconino County in support of a traffic design must be signed and sealed by an engineer registered in the State of Arizona. Traffic designs for all projects will be reviewed and approved (or rejected) by the County Engineer, the Community Development Department and possibly Board of Supervisors action following public comment.

TRAFFIC SIGNALS

At the present time, Coconino County does not maintain any signalized intersection. Any proposed development requiring signalization should be coordinated with the County Engineer.

UTILITIES

Presumption: It is understood and agreed that the Design Engineer and/or owner has considered all of the permanent and temporary utility appurtenances in their existing and relocated positions, as shown on the plans and specifications for the project. Therefore, the

owner shall bear all risk and cost arising from problems associated with utility locations. County approval of plans and/or issuance of permits shall not affect this presumption.

Agency Control: Arizona Revised Statutes specify that control and authority for the design, construction, and operation of sewage systems and waste treatment facilities resides in the Arizona Department of Environmental Quality (ADEQ). Engineering bulletins published by ADEQ provide guidelines for design of sewage systems. These include, but may not be limited to:

- Bulletin #11: Minimum Requirements for Design, Submission of Plans and Specifications of Sewage Works
- AAC Title 18 Chapter 9
- Bulletin #15: Package Aeration Plants

Design must be coordinated with all potentially affected utilities and they must agree to the plans by signature on the cover sheet (see the section on Cover Sheet under Construction and Improvement Plans).

Coconino County may choose to impose additional or more restrictive requirements than those provided by other regulatory agencies or those shown in commonly accepted Standards such as M.A.G Specs.

General: With the exception of minor service extensions to individual parcels, all longitudinal utility facilities should be located within street rights-of-way or strip easements. Strip easements for utilities shall not be used to deny access to parcels. In general pavement cuts will be prohibited for the first 15 years after construction. All services shall be designed to avoid the need to remove and replace new pavement or other road surfaces within the first 15 years after construction. Water and sewer shall be designed to facilitate construction in conformance with section 600 of M.A.G Specs.

Storm Drains: In general storm drainage will be constructed in conformance with MAG Specs sections 618, 621 and 760. Additionally, Coconino County imposes a minimum pipe size (for any purpose including driveways) of 15 inches. Corrugated metal pipe shall be at the minimum 14 gage. All metal pipe shall be aluminized or bituminous coated – specified with regard to soil chemistry. All culverts shall have prefabricated end sections unless approved for other end treatment by the County Engineer.

Water/Sewer: All water and sewer design and construction shall conform to current ADEQ requirements (see ADEQ Bulletin #8 or local utility requirements for disinfection). If ADEQ requirements are found to be in conflict with Coconino County or other Agency requirements the most restrictive shall apply. For design purposes and public safety, water pipe shall not:

- Infringe upon an area which is within six feet of either side of a sewer main and shall not be below, at the same level as, or less than two feet above the top of a sewer main unless extra protection is provided. Extra protection shall consist of constructing the sewer main with mechanical joint ductile iron pipe or with slip-joint ductile iron pipe. If joint restraint is provided it shall consist of encasing both the water and sewer lines in at least six inches of concrete.

- Pass through or come into contact with any part of a sewer manhole. The minimum separation between water line and manholes shall be six feet measured from the manhole center.

- Pass closer than six feet from the side or bottom of a pressure sewer (force main) nor closer than two feet over the top. If it is necessary for a sewer force main to be placed closer to a water line than these distances, then the sewer line must be encased in at least six inches of concrete for a distance of ten feet on either side of the water line.

The following two pages illustrate the general requirements for underground utilities and associated trenching on County permitted projects.

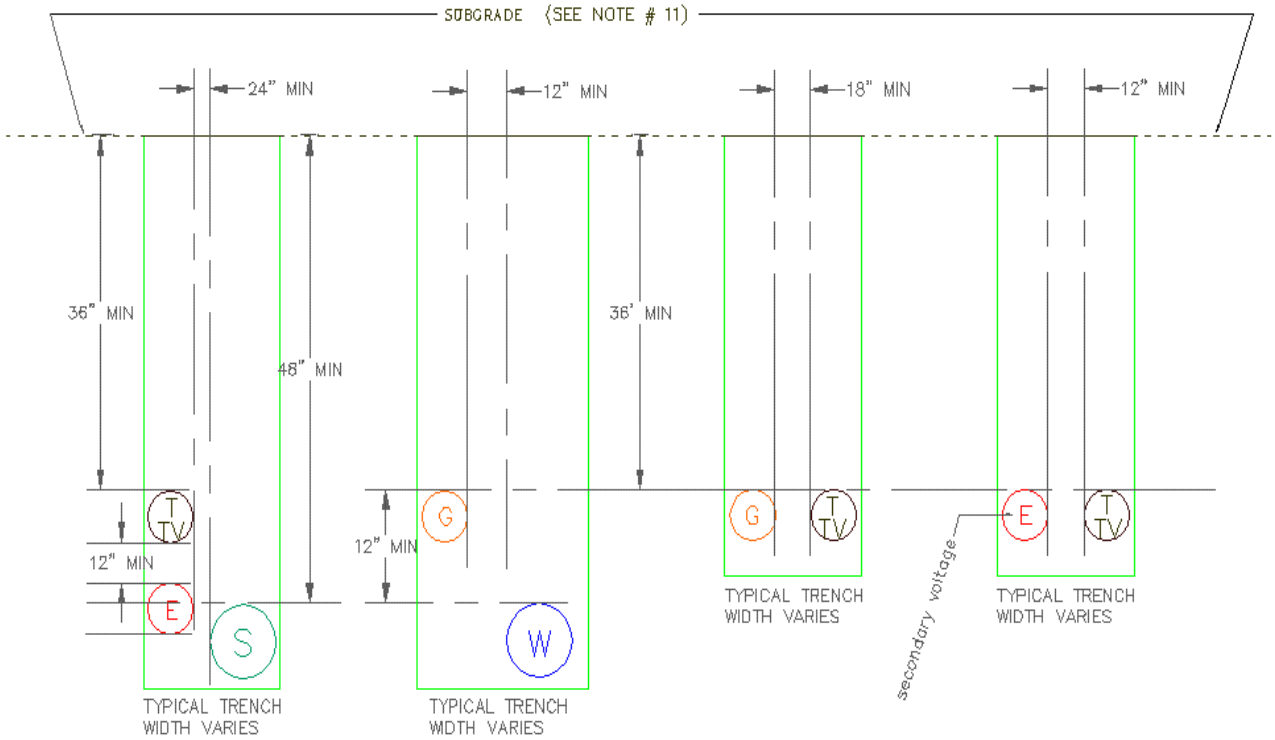

UNDERGROUND UTILITIES – TRENCH DETAIL

Notes For:

Underground Utilities – Trench Detail

1. Dimensions shown are minimums – additional cover and/or clearances may be required depending on the number and size of utilities in a trench.

2. Minimum cover shall be measured from the top of the pipe to the subgrade under existing or proposed pavement – on non-paved roads the minimum cover shall be the distance between the top of the pipe and finished grade.

3. Minimum horizontal distance between water and sewer pipe shall be six (6) feet – see notes on preceding pages!

4. When water and sewer lines cross refer to ADEQ guidelines – also see notes on preceding pages!

5. Although power and communication cables may be installed in sanitary sewer trench, a separate trench may be required by local controlling utilities.

6. Water and electric power shall not be placed in the same trench.

7. Gas and sewer lines shall not be placed in the same trench.

8. Tracer wire and warning tape shall be installed.

9. Power line trench and communications trench shall not be placed closer than 3 feet from water lines and 2 feet from sewer lines. Gas line trench shall not be placed closer than 3 feet from sewer lines and 1.5 feet from water lines. All crossing utility lines must maintain a vertical separation of at least 1.5 feet. *Note:* The minimum vertical separation required for water and sewer is greater – see the notes on the preceding pages!

10. CALL BLUE STAKE 1-800-STAKE-IT AT LEAST TWO DAYS BEFORE YOU DIG!

11. All cover depths are measured from top of subgrade.

12. Granular bedding and/or backfill will be required in most trenches – coordinate with County Engineer.

BICYCLES

Bicycle Facility: A general term denoting improvements and provisions made by public or private agencies to accommodate or encourage bicycling, including parking facilities, maps, bikeways, and shared roadways not specifically designed for bicycle use.

Bikeway: Any road, path, or route which in some manner is specifically designated as being open to bicycle travel, regardless of whether such facilities are designated for the exclusive use of bicycles or are to be shared with other modes of transportation.

Bike Lane: A portion of the roadway which has been designated by striping, signing, and pavement markings for the preferential or exclusive use of bicyclists.

Bike Path: A bikeway that is physically separated from motorized vehicle traffic by an open space or barrier and is either within the highway's right-of-way or within an independent right-of-way.

Bike Route: A segment of a system of bikeways designated by the jurisdictional authority with appropriate directional and informational markers, with or without specific bike route numbers.

Shared Roadway: Any roadway upon which a bicycle lane is not designated and which may be legally used by bicycles regardless of whether such facility is specifically designated.

Pavement Surfaces:

- Shall be designed free from irregularities and the edges of the pavement shall be uniform in width.
- Roads that are expected to have bicycle traffic shall not have "rumble strips".

Drainage Grates and Utilities Covers:

- When a new roadway is designed, all drainage grates and utility covers should be kept out of the bicyclist's expected path.
- Drainage grates and utility covers shall be adjusted flush with the pavement surface on all new construction and reconstruction.
- On new construction where bicyclists will be permitted, curb inlets rather than drainage grates should be used wherever possible.
- Bicycle safe drainage grates shall be used on all roadways.

Railroad Crossings:

- Railroad-highway grade crossings should ideally be a right angle to the rails.
- Pavement surfaces at railroad crossings shall be designed, constructed, and maintained to permit safe, smooth crossings for all roadway users. If the crossing angle is less than approximately 45 degrees, consideration should be given to widening the outside lane, shoulder, or bicycle lane to allow bicyclists adequate room to cross the tracks at a right angle. Where this is not possible, commercially available compressed flange-way fillers can enhance bicyclist' safety. If cost is a

factor, these need only be installed across the bike lane portion of the total pavement width.

- Warning signs and pavement markings should be installed in accordance with the Manual on Uniform Traffic Control Devices.
- Permits from the railroad must be issued prior to County approvals or acceptance.

Additional Roadway Hazards:

- Smooth transitions should exist at all cattle guards, gutters, manholes, and all cut and patch sites on roadways.
- Raised pavement markings shall not be used directly along designated bicycle facilities.

Bridge Treatments: Bridge crossings should incorporate facilities which provide the same accommodations for all traffic modes that exist on the road-ways to and from the bridge. Bicyclists should not be expected to switch from an on-road bike lane before the bridge to an off-street sidewalk while on the bridge.

Traffic Control Devices:

- The manual on *"Uniform Traffic Control Devices"* should be consulted for guides on signs and pavement markings.

Wide Curb Lanes (Shared Roadway): Where possible on existing multi-lane roadways, the Design Engineer may consider reducing the inner lane widths to 11 feet (3.4 m) to provide wider outside lanes.

Bike Route: Signing of bike route shall be in accordance with the manual on *"Uniform Traffic Control Devices"*.

Paved Shoulders: The designation of paved shoulders as bike lanes or bike routes shall be a decision made by the County Engineer.

Bike Lanes:

- Shall always be one-way facilities that carry traffic in the same direction as the adjacent motor vehicle lane. Two-way bicycle lanes on one side of the roadway are unacceptable.
- Bike lanes on one-way streets shall be placed on the right edge of the street, except in areas where placement on the left will reduce conflict.
- Where possible, the inner lane widths may be reduced to 11 feet (3.4 m) multi-laned roads to provide space for a bike lane (when approved by the County Engineer).
- The minimum bike lane width on an urban curbed street where parking is prohibited shall be 4 feet (1.2 m), measuring from the edge of the vehicle lane to the longitudinal joint between the roadway surface and the gutter pan (assuming the gutter pan is 12" or more in width). If the gutter pan is less than 12 inches in width, the minimum distance from the edge of the vehicle lane to the face of curb shall be no less than 5 feet.
- The minimum bike lane width on non-curbed streets with no parking is 4 feet (1.5 m) of usable pavement width.

- The minimum bike lane width for a curbed street where a parking lane is provided is 5 feet (1.5 m) to the left of a minimum 8 foot (2.4 m) parking area. Bicycle lanes shall always be placed between the parking lane and the through traffic lane. If the parking volume is substantial or turnover is high, an additional 1 or 2 feet (.3 or .6 m) of width is recommended for safe bicycle operation – see the AASHTO *"Guide for the Development of Bicycle Facilities"*.
- A minimum 4 inch wide (10 cm) stripe must be placed between the bike lane and the through traffic lanes, except at intersections and at areas marked for merging. See the manual on *"Uniform Traffic Control Devices"* for further guidance.
- Diamond and bike lane symbols along with bike lane signs will be placed at major and minor intersections along designated bike lanes in urban areas. Bike lane signs and the diamond symbol will be placed approximately every 1,400 feet (425 m) in urban developed areas. Based on engineering judgment, signs and pavement markings may be placed at greater intervals in rural areas.
- Bicycle lanes tend to complicate both bicycle and motor vehicle turning movements at intersections. Bicyclists proceeding straight through and motorists turning right must cross paths. Striping and signing configurations which encourage these crossings in advance of the intersection, in a merging fashion, are preferable to those that force the crossing in the immediate vicinity of the intersection. See the AASHTO *"Guide for the Development of Bicycle Facilities"* for further guidance on the striping of intersections.

BIKE PATH DESIGN GUIDELINES

General:

- Bike paths should be designed for the preferential use of bicyclists.
- Bicycle paths are facilities with minimal cross flow by motor vehicles.
- Sidewalks are not an acceptable bicycle facility (however, certain segments of the population may desire to use sidewalks and are required by law to yield right-of-way to pedestrians and when at driveways, shopping center entrances, and street intersections).
- Coordination between the County, local communities, and private developments on bike path facilities shall be done through the County Parks & Recreation Department.
- On and off-street bicycle facilities should complement rather than supplant each other.

Bike Path Width and Clearance Distances:

- The minimum width for a two-directional bicycle path is 10 feet (3 m). Twelve feet (3.6 m) is recommended where high use is expected.
- A minimum 2 foot wide (.6 m) graded area (compacted) shall be provided adjacent to both sides of the pavement. Further, this area shall remain free from obstructions and serve as 2 feet (.6 m) of longitudinal clear distance, all of which is to be included within the designated right-of-way.
- The bike path vertical clear distance shall be 10 feet (3 m).
- If a bicycle path is planned adjacent to highway development, strict separation distances shall be adhered to unless an AASHTO recommended barrier is provided. The minimum distance from the back of the curb to the inside edge of the bicycle path is:

20 feet (6.1 m) along expressways
5 feet (1.5 m) along all arterial's
5 feet (1.5 m) along all other roads – when sufficient right-of-way is available

- One-way bicycle paths are not acceptable.

Bike Path Design Speed: A minimum design speed of 20 mph (21 km/hr) should be used on all bicycle paths; however, a design speed of 30 mph (48 km/hr) shall be used when the grade exceeds 4 percent or when strong prevailing tail winds exist.

Bike Path Horizontal Alignment and Super-Elevation:

- The minimum super-elevation rate is 2 percent and should not exceed 5 percent.
- The minimum design radius of curvature shall be derived from the formulas and figures provided in the AASHTO *"Guide for the Development of Bicycle Facilities"*.
- Where curves are used along bike paths, proper warning signs, pavement markings and additional width should be provided in accordance with the AASHTO *"Guide for the Development of Bicycle Facilities"* and the manual on *"Uniform Traffic Control Devices"*.

Bike Path Grades: Grades greater than 5 percent are not recommended. Where the terrain dictates, grades over 5 percent and less than 500 feet long (150 m) are acceptable in combination with a higher design speed and additional path width.

Bike Path Sight Distances: The minimum site distance shall be derived from figures and formulas contained in the AASHTO *"Guide for the Development of Bicycle Facilities"*

Bike Path Intersections:

- Preferably, the number of bike path and roadway/driveway intersections should be minimized.
- Rights-of-way should be assigned and sight distances provided so as to minimize potential conflicts resulting from unconventional turning movements.
- Bike path intersections and approaches shall be on as flat of a grade as possible.
- Adequate warning of intersections shall be given in advance to afford bicyclists a safe stopping distance.
- For traffic control devices, application of the manual on *"Uniform Traffic Control Devices"* warrant criteria shall be used (signal, stop sign, yield sign, etc.).
- Sign type, size, and location shall be in accordance with guidance provided in the manual on *"Uniform Traffic Control Devices"*.

Bike Path Signing and Markings: Uniform application of traffic control devices (signs and markings), are described in the manual on *"Uniform Traffic Control Devices"*. A 4 inch wide (10 cm) yellow centerline strip is recommended to separate opposite directions of travel along bike paths under the following circumstances:

(1) for heavy volumes of bicycles.
(2) on curves with a restricted sight distance,
(3) and on unlit bicycle paths where night time riding is expected.

Bike Path Pavement Structure:

- Due to variations in soils, loads, materials, and construction practices, a recommended typical structural section is not provided. A soils investigation should be conducted to determine load carrying capabilities – see the AASHTO *"Guide for the Development of Bicycle Facilities"*.This should be done under the supervision of a qualified engineer submitted for approval.
- Bicycle paths should be designed to sustain, without damage, wheel loads of emergency, patrol, maintenance, and other motor vehicles that are expected to use or cross the path.
- Bicycle paths should be constructed and maintained so that a smooth and consistent surface is provided. Skid resistance qualities shall not be sacrificed for the sake of smoothness.
- Bike paths should be constructed of either asphalitc or portland cement concrete. Bike paths are intended for all bicycles not just mountain bikes, therefore granular materials are not acceptable as a surface for bike paths.

Bike Path Drainage:

- A minimum cross slope of 2 percent is recommended to provide adequate drainage.
- Sloping the bike path in one direction is recommended rather than crowning.
- If a bicycle path is built on the side of a hill, a ditch of suitable dimensions should be built on the uphill side to intercept drainage.
- Where necessary, catch basins with drains should be provided to carry away intercepted water.
- Manhole coves and drainage grates should be located off a bicyclist's expected travel path.
- Other bike path drainage considerations should account for the conveyance of water adjacent to the bike path so as to prevent ponding on the paved area.

Bike Path Lighting:

See the AASHTO *"Guide for the Development of Bicycle Facilities"*.

Bike Path Restriction of Motor Vehicles: A foldable or removable bollard post is recommended to restrict unauthorized access to bike paths. Bollard posts should have permanent reflectors for nighttime visibility and be painted a bright color for daytime visibility. When more than one post is used, a minimum 5 foot spacing (1.5 m) is recommended.

Bike Path Grade Separation Structures: For guidance on grade separations alternatives, bridge enhancements, railing specifications, etc., refer to the AASHTO *"Guide for the Development of Bicycle Facilities" and "American Disabilities Act"* requirements.

Chapter V

ROAD DESIGN STANDARDS

To: **ALL USERS OF THE ROADWAY DESIGN STANDARDS**

From: Coconino County Public Works Department

Subject: **ROAD STANDARDS**

These design standards are a guideline and reference to roads that are to be constructed for acceptance into the Coconino County road network. These standards include a summary table, followed by several examples of various road layouts that are possible within a given classification.

The minimum lane and right-of-way widths set forth in the table are based on design guidelines from the ***Institute of Transportation Engineer's (ITE) Recommended Guidelines for Subdivision Streets, A Recommended Practice***. Other references consulted for this publication include the ***AASHTO "Green Book"; the National Cooperative Highway Research Program's Report #362, Roadway Widths for Low-Traffic-Volume Roads, 1994*** and ***City of Flagstaff Engineering Design Standards.***

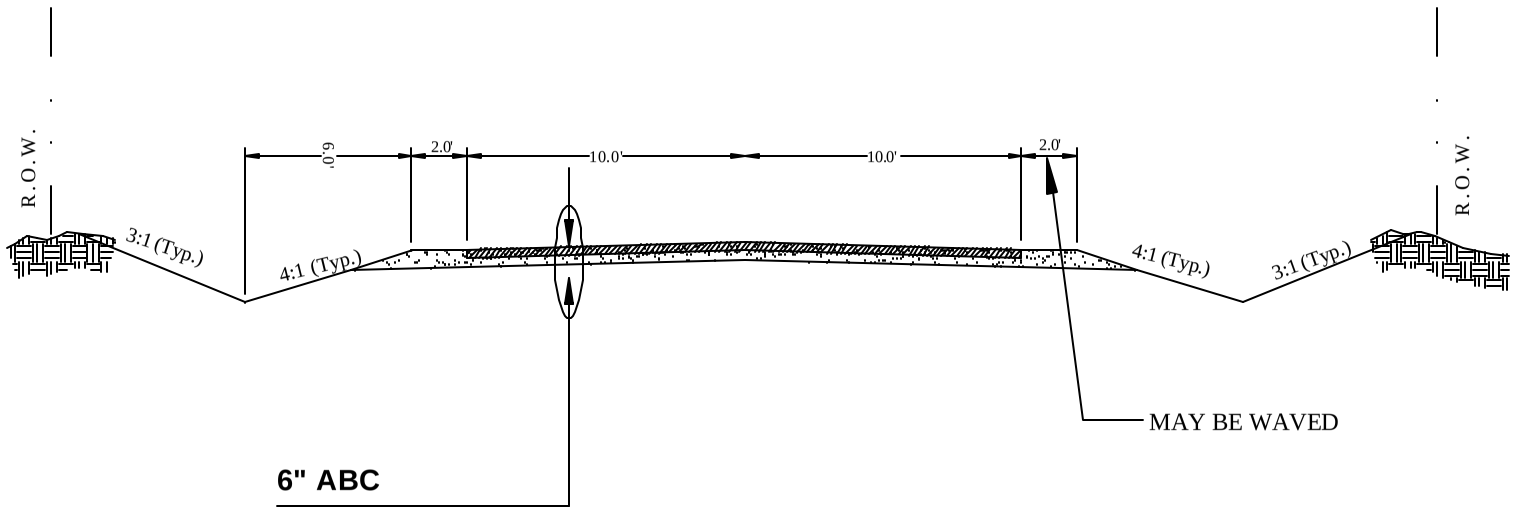

Coconino County Road Standards

NO SCALE

DRAWN: APRIL 2004

TYPICAL SECTION
LOT SPLIT STANDARD

(NOT FOR COCONINO COUNTY MAINTENANCE)

Detail #

LOT SPLIT STANDARD

TYPICAL PAVEMENT SECTIONS

PAVEMENT STRUCTURAL SECTION NO. 1

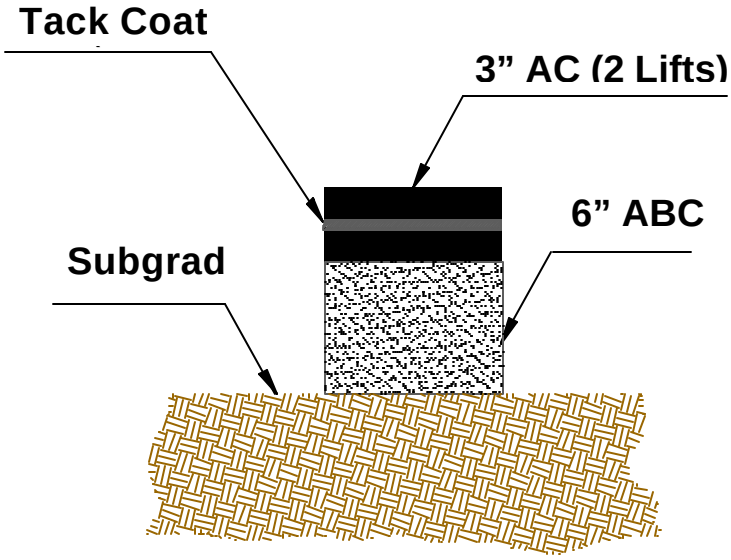

PAVEMENT STRUCTURAL SECTION NO. 2

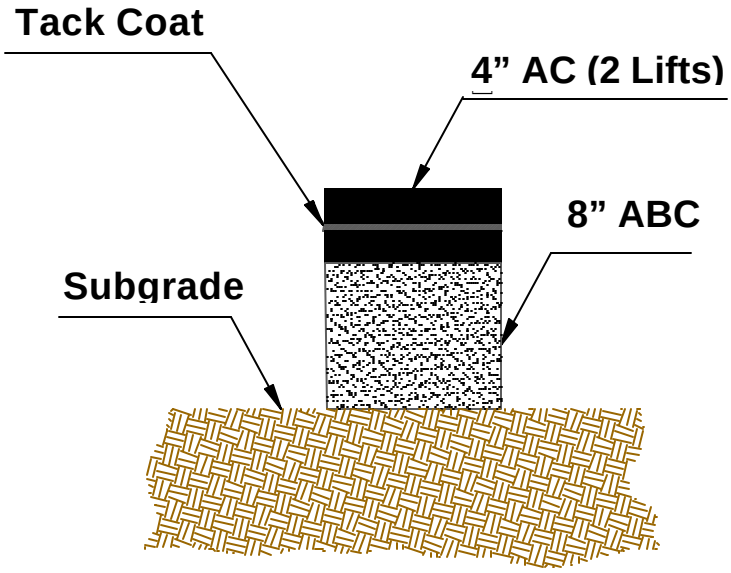

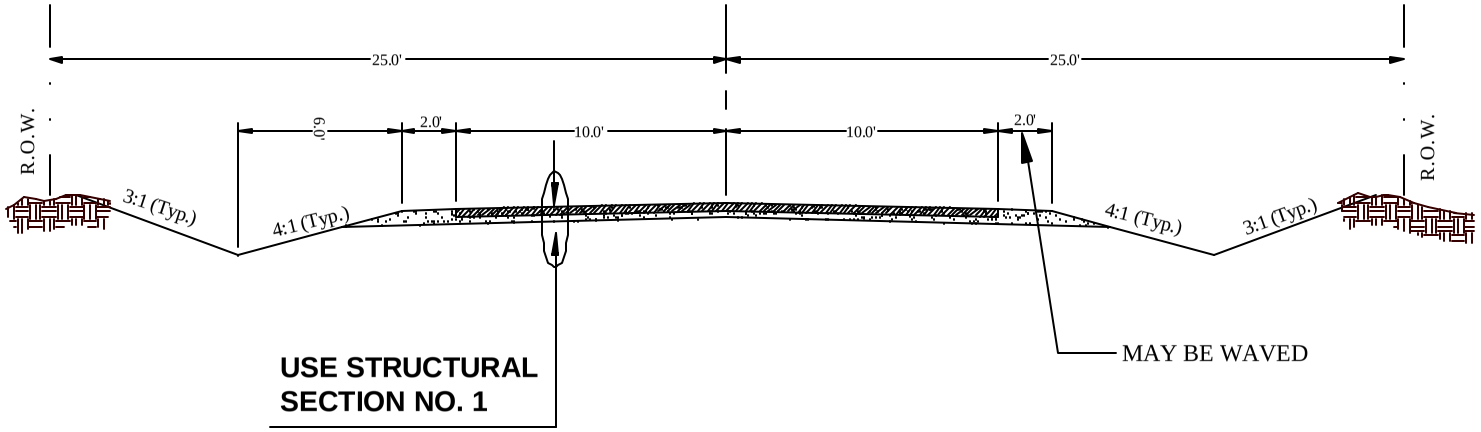

Coconino County Road Standards

NO SCALE

DRAWN: APRIL 2004

Detail #

LOT SPLIT STANDARD

TYPICAL SECTION
LOT SPLIT STANDARD

(NOT FOR COCONINO COUNTY MAINTENANCE)

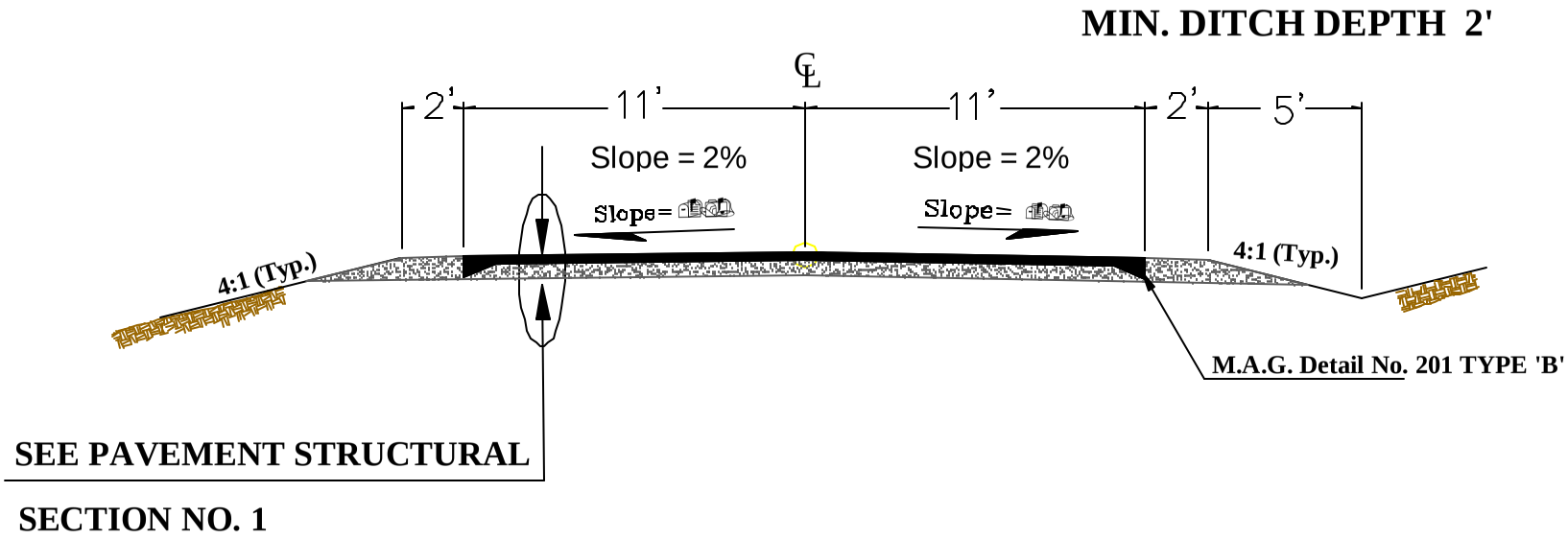

Coconino County Road Standards

Country Lane

NO SCALE

Detail
Country Lane

DRAWN:
APRIL 2004

MINIMUM ACCEPTABLE
STANDARD

MINIMUM RIGHT-OF-WAY: 60'
MINIMUM IMPROVED SURFACE: 24'

Note A: Bicycles in vehicle lanes.
Note B: If terrain does not allow slopes to fall within R/W, go to next wider R/W.

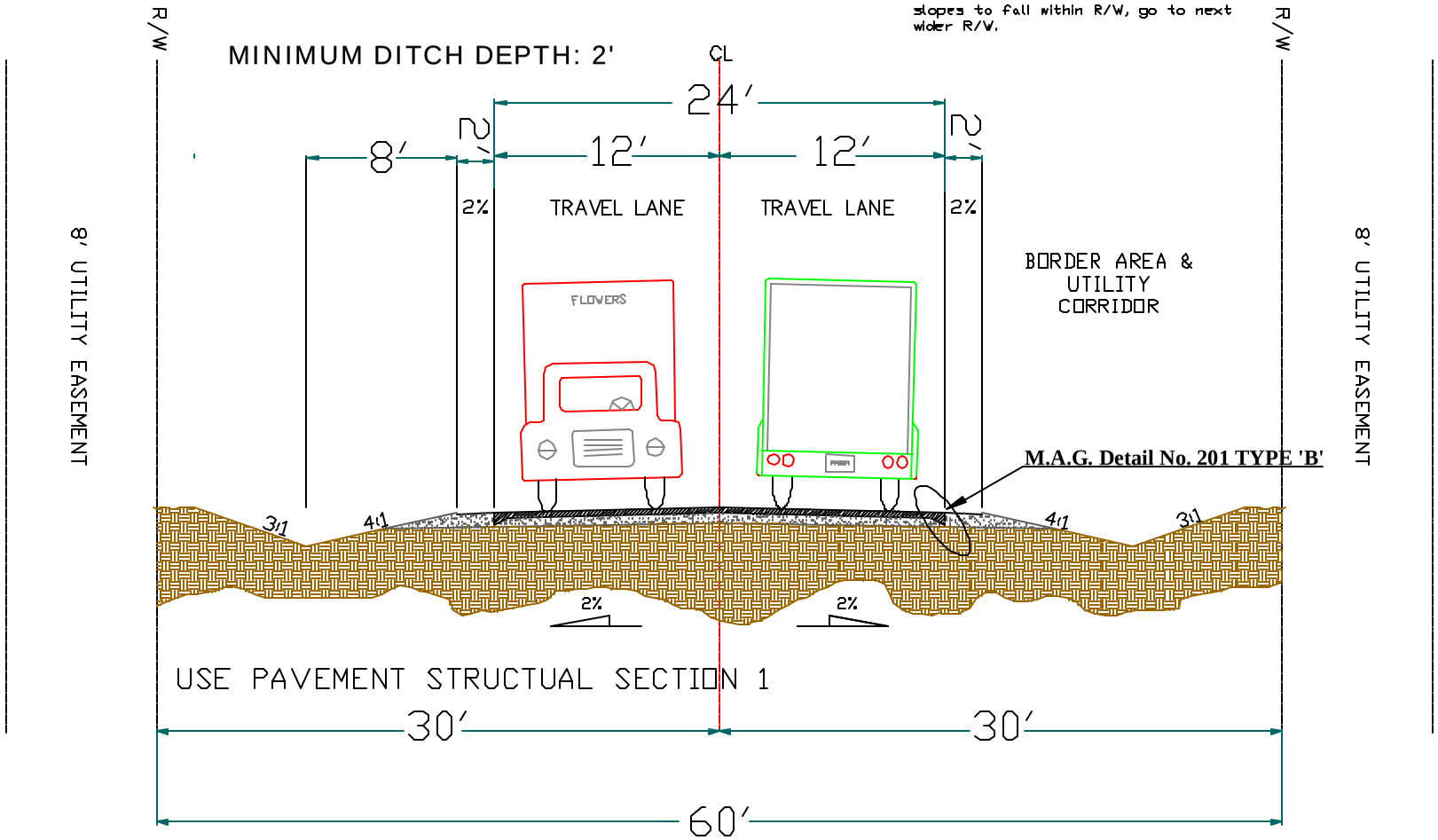

Detail #
1-A

MINIMUM ACCEPTABLE STANDARD

Coconino County Road Standards
Narrow Residential Local Road with No Curb and Gutter

NO SCALE

DRAWN:
APRIL
2004

MINIMUM RIGHT-OF-WAY: 50'
MINIMUM IMPROVED SURFACE: 28'

Note A: Bicycles in vehicle lanes.
Note B: If terrain does not allow slopes to fall within R/W, go to next wider R/W.

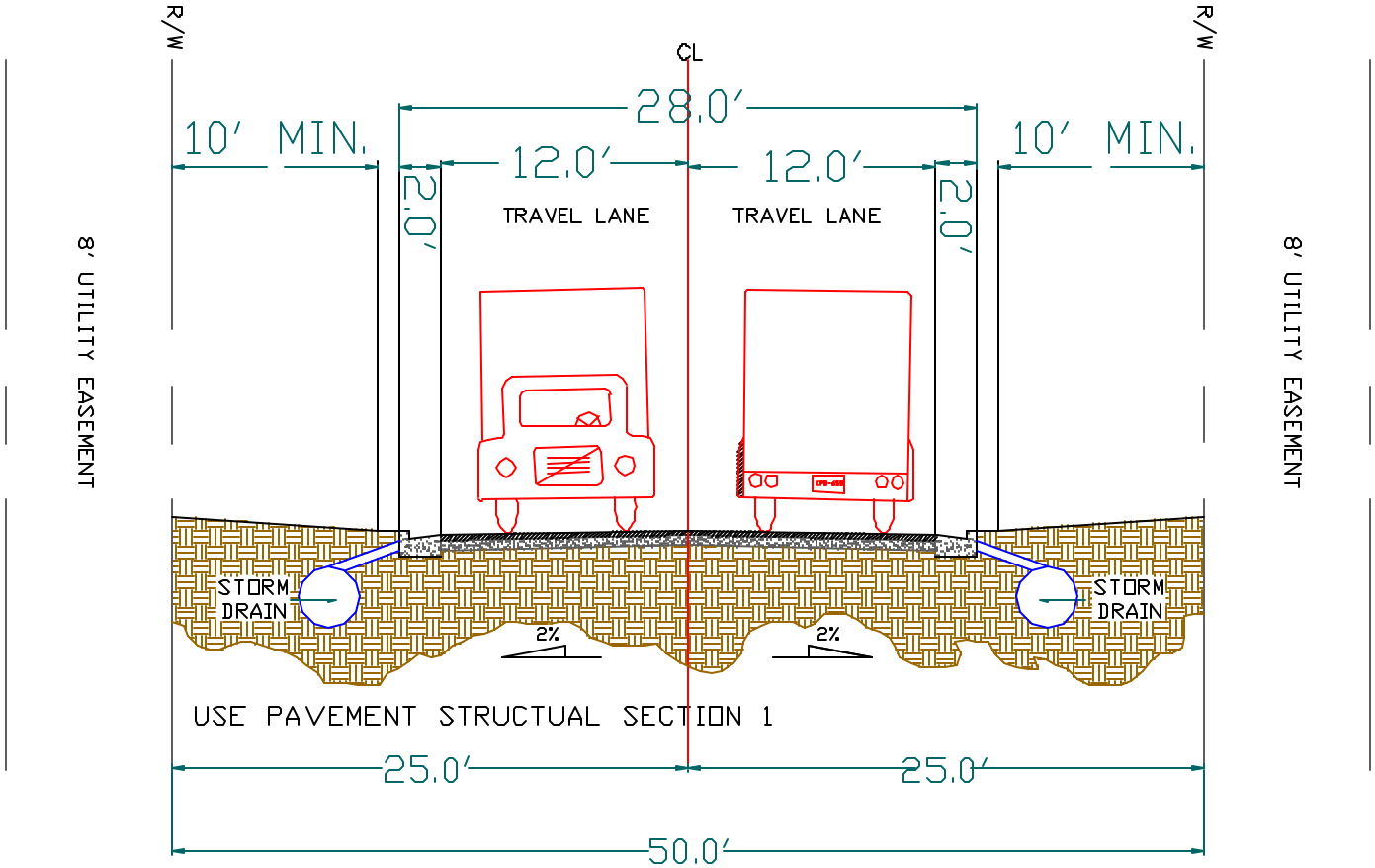

Coconino County Road Standards
Narrow Residential Local Road

Detail #
1-B

OPTION

NO SCALE
DRAWN:
APRIL 2004

Note A: Bicycles in vehicle lanes.

Note B: If terrain does not allow slopes to fall within R/W - Additional R/W will be required.

MINIMUM RIGHT-OF-WAY: 60'
MINIMUM IMPROVEMENT SURFACE: 26'

MINIMUM DITCH DEPTH: 2'

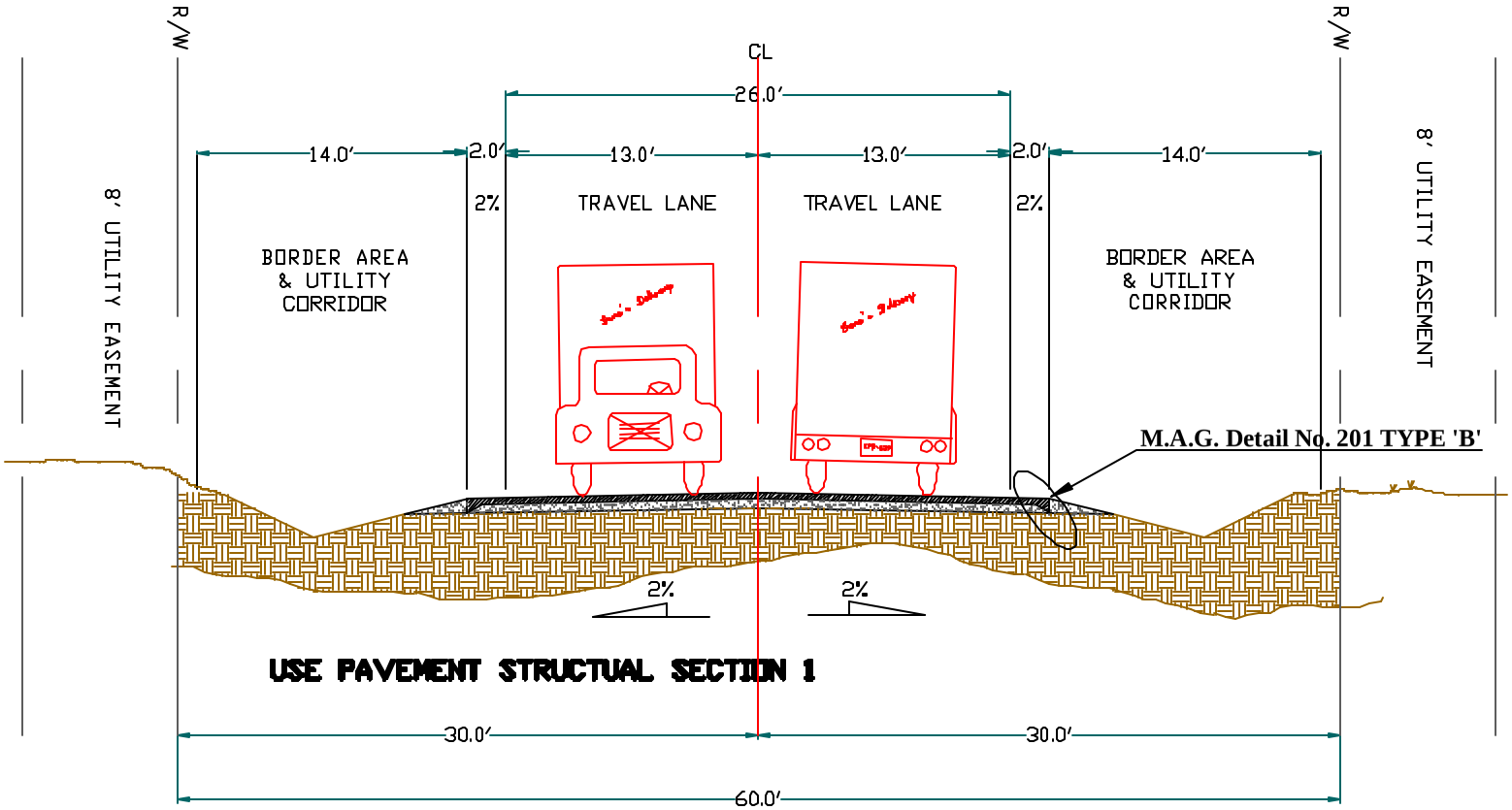

Coconino County Road Standards
Residential Local Road with No Curb and Gutter

MINIMUM ACCEPTABLE STANDARD

Detail #
2-A

NO SCALE
DRAWN: APRIL 2004

MINIMUM RIGHT-OF-WAY: 50'
MINIMUM IMPROVEMENT SURFACE: 30'

Note A: Bicycles in vehicle lanes.

Note B: If terrain does not allow slopes to fall within R/W, go to next wider R/W.

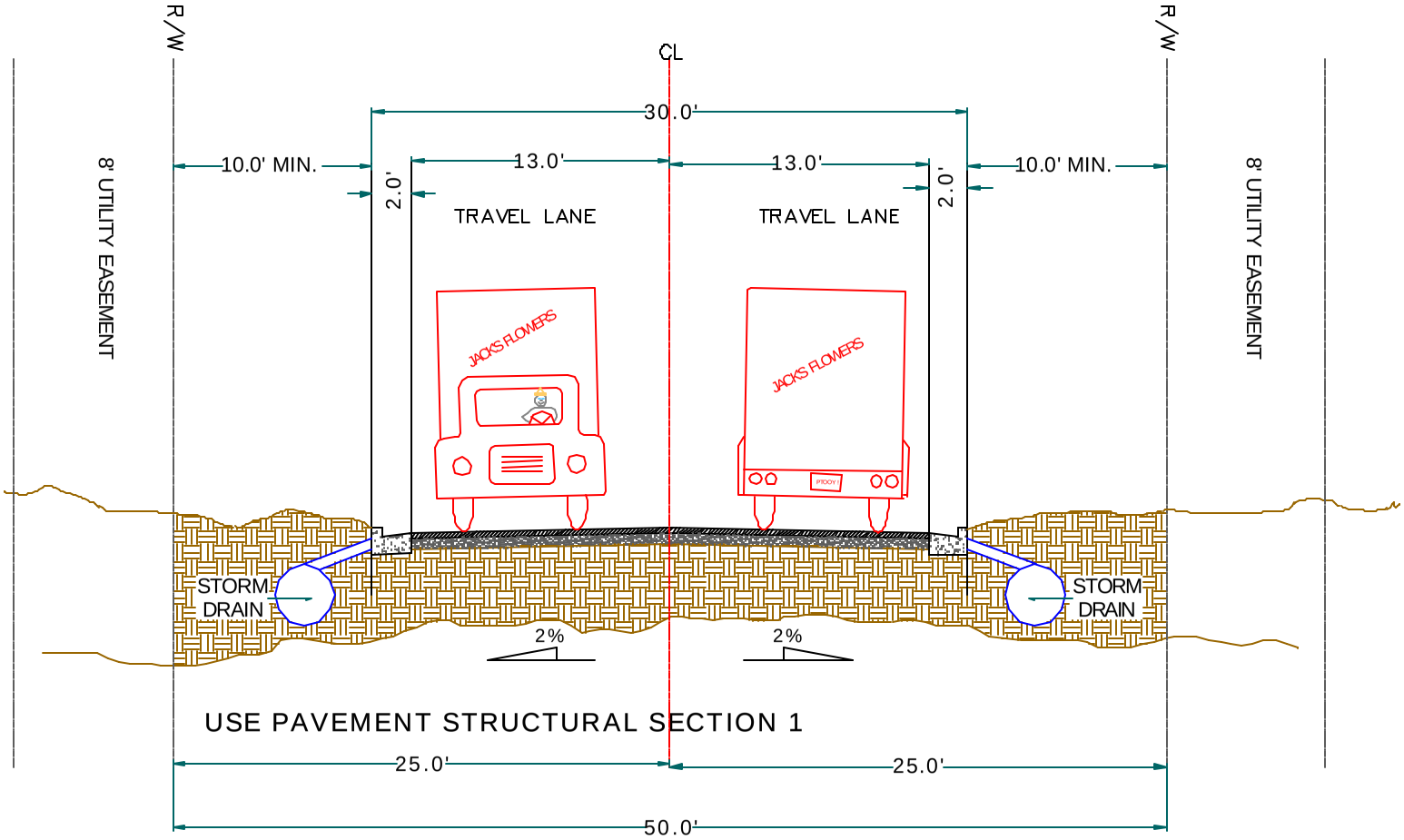

Coconino County Road Standards

Residential Local Road With Curb and Gutter

Detail #

NO SCALE
DRAWN:

MINIMUM RIGHT-OF-WAY: 80'
MINIMUM IMPROVEMENT SURFACE: 39'

Note A: Bicycles in vehicle lanes.

Note B: If terrain does not allow slopes to fall within R/W, go to next wider R/W.

Note C: Chip seal coat shall be applied to final paved surface.

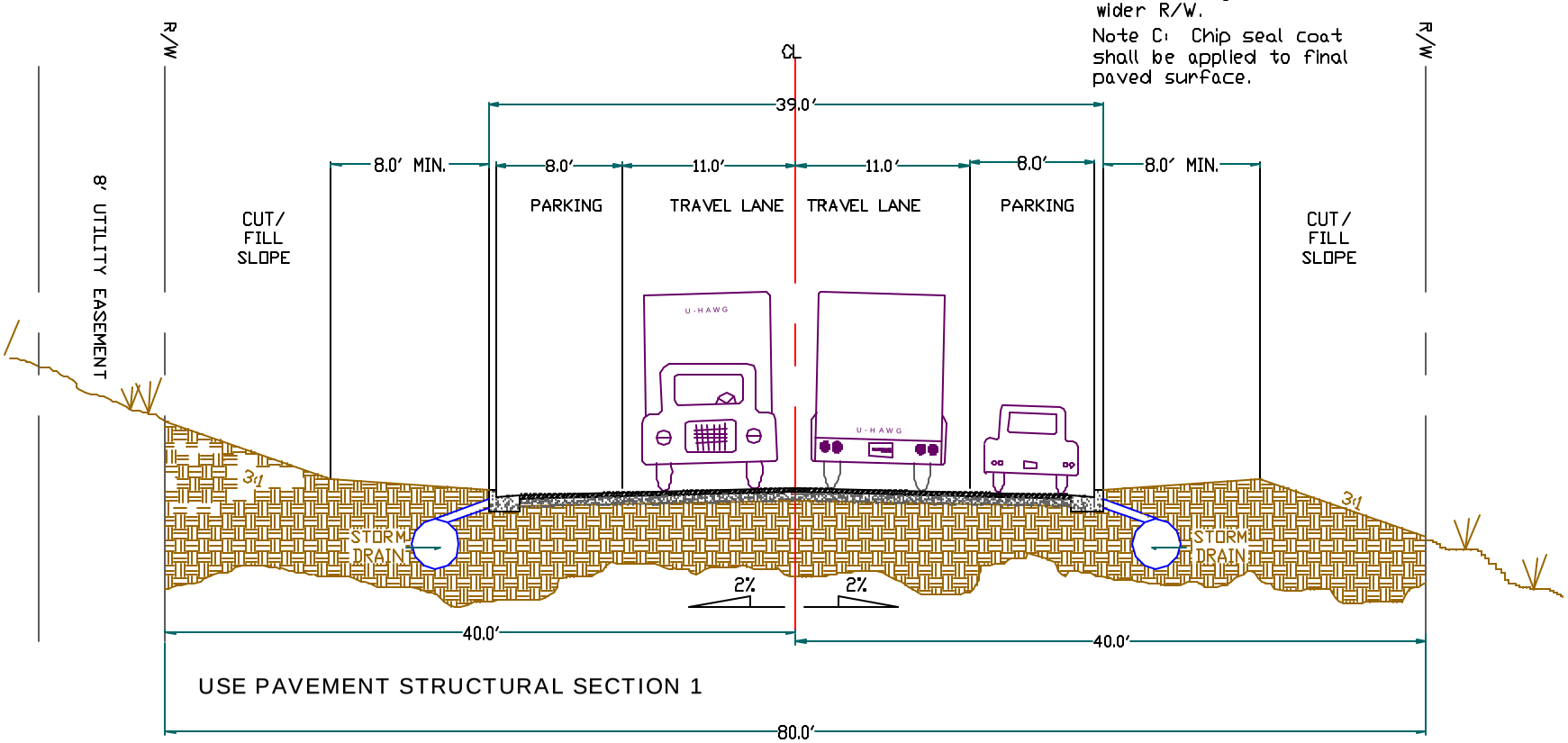

Coconino County Road Standards
Residential Local Road With Parking

NO SCALE

Detail #
2-C

OPTION

DRAWN:
APRIL 2004

MINIMUM RIGHT-OF-WAY: 80'
MINIMUM IMPROVEMENT SURFACE: 28'

MINIMUM DITCH DEPTH 2'

Note A: If terrain does not allow slopes to fall within R/W, go to next wider R/W.

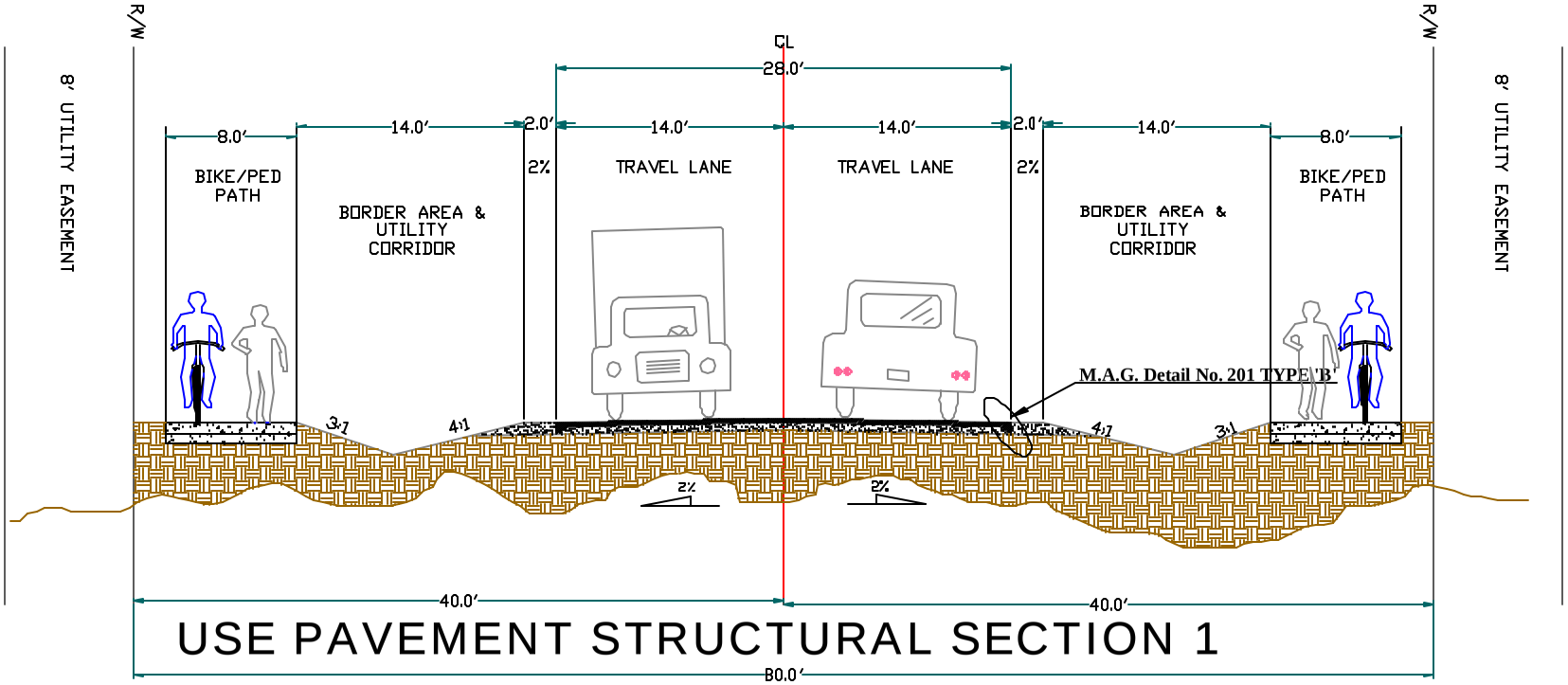

USE PAVEMENT STRUCTURAL SECTION 1

Coconino County Road Standards
Minor Collector with No Curb and Gutter

NO SCALE

Detail #
3-A

MINIMUM ACCEPTABLE STANDARD

DRAWN:
APRIL 2004

Note A: Bike Lane on one side of road only.

Note B: Path one side of road only.

Note C: If terrain does not allow slopes to fall within ROW, go to next wider ROW.

MINIMUM RIGHT-OF-WAY: 60'
MINIMUM IMPROVEMENT SURFACE: 32'

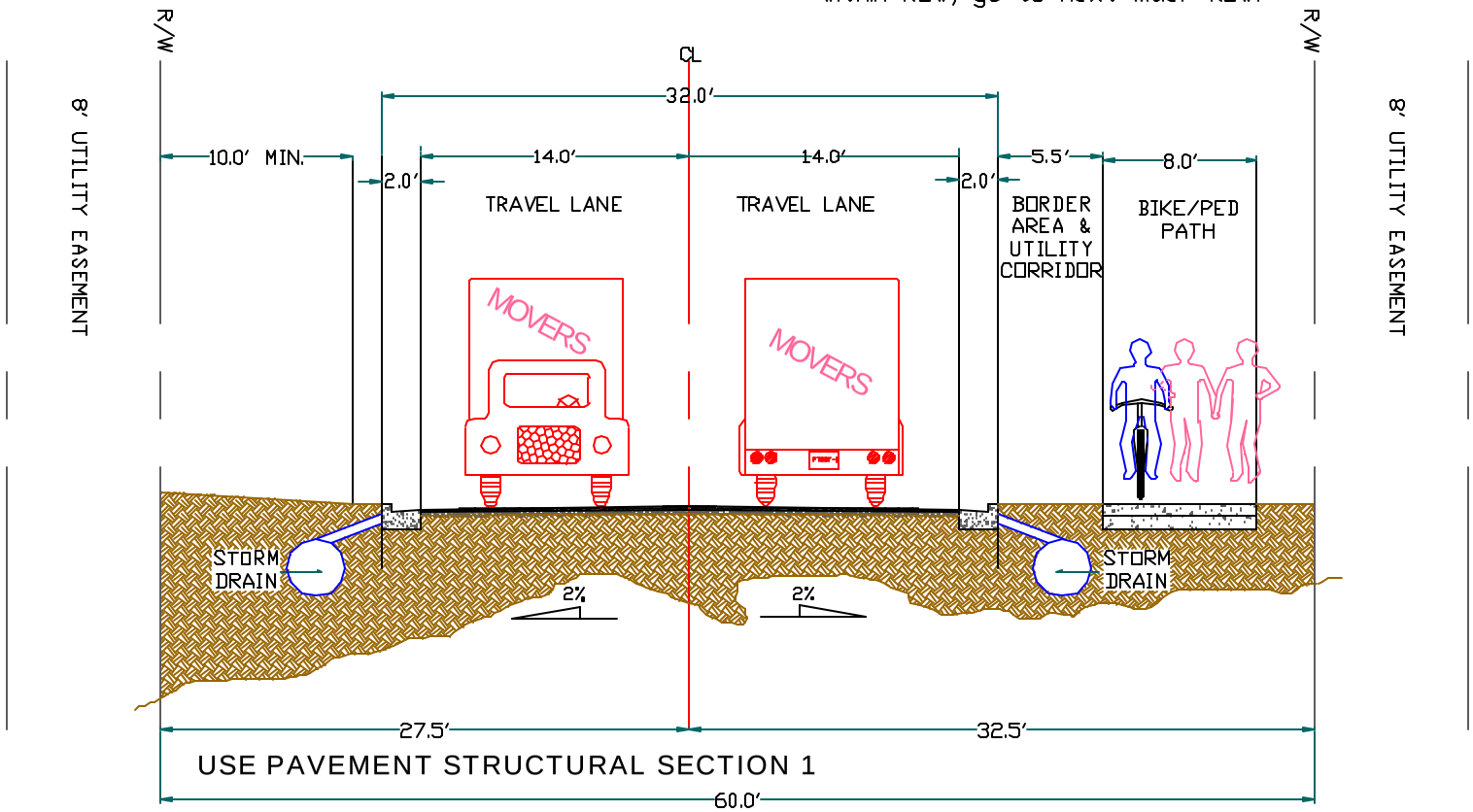

Coconino County Road Standards

Minor Collector With Seperate Bicycle Lane OPTION

Detail #
3-C

NO SCALE
DRAWN:
APRIL 2004

MINIMUM RIGHT-OF-WAY: 80'
MINIMUM IMPROVEMENT SURFACE: 40'
MINIMUM BORDER AREA: 6' FROM FACE OF CURB
FINAL SECTION SELECTION BY TRAFFIC STUDY

Note A: Path on one side of road only.

Note B: If terrain does not allow slopes to fall within R/W, go to next wider R/W.

Note C: Outside traffic lane shall be stripped for 12 ft. lanes (Max).

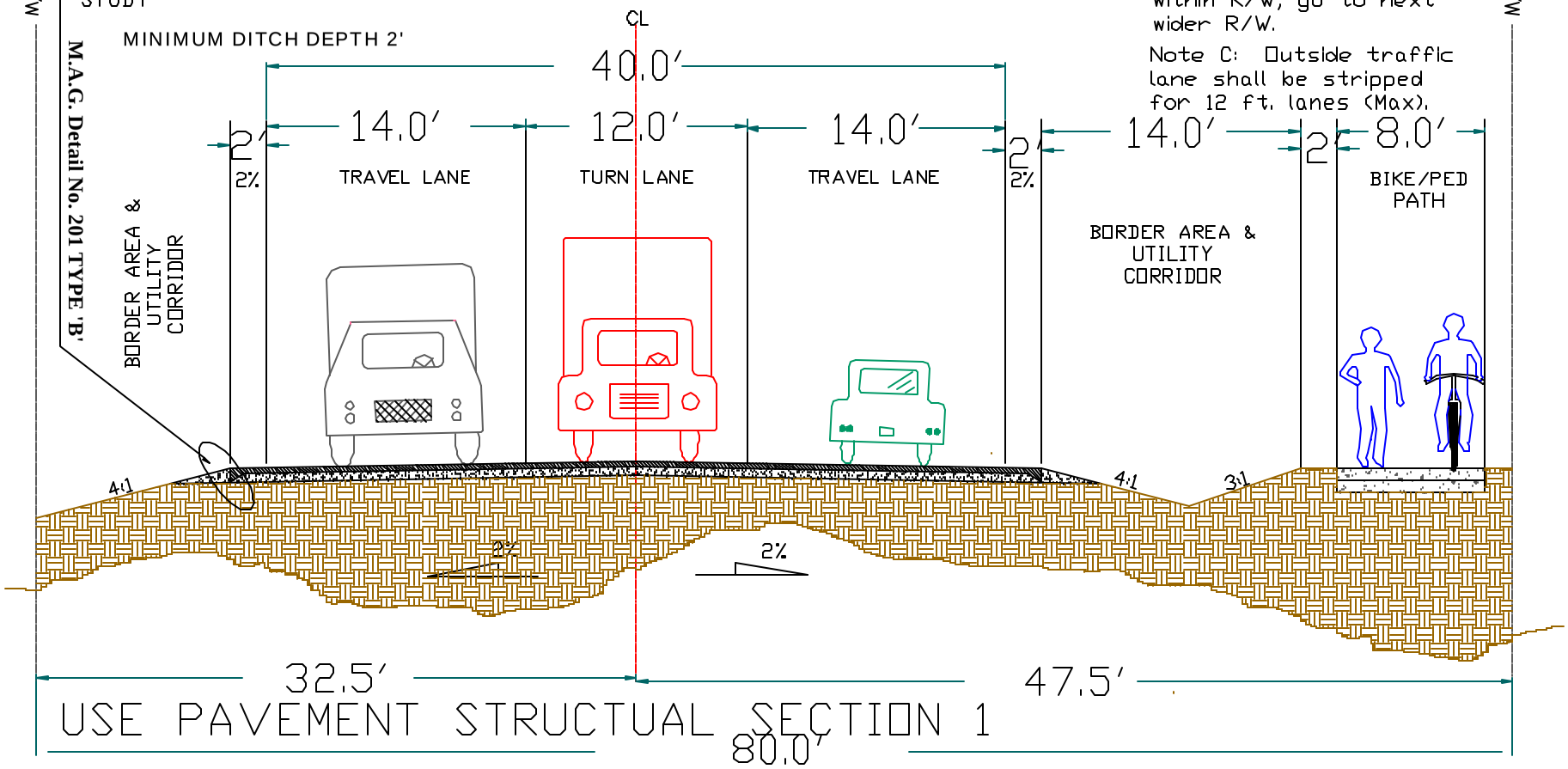

USE PAVEMENT STRUCTUAL SECTION 1

Detail #
4-C

OPTION

Coconino County Road Standards
Minor Collector Rd. - No curb/Gutter
Center Lane & Separate Bike/Ped Lane

NO SCALE
DRAWN:
APRIL 2004

MINIMUM RIGHT-OF-WAY: 80'
MINIMUM IMPROVEMENT SURFACE: 52'
MINIMUM BORDER AREA: 6' FROM FACE OF CURB
FINAL SECTION SELECTION BY TRAFFIC STUDY

Note A: Path on one side of road only.
Note B: If terrain does not allow slopes to fall within R/W - Additional R/W will be required
Note C: Thru traffic lanes shall be stripped for 12 Ft. width (MAX.).

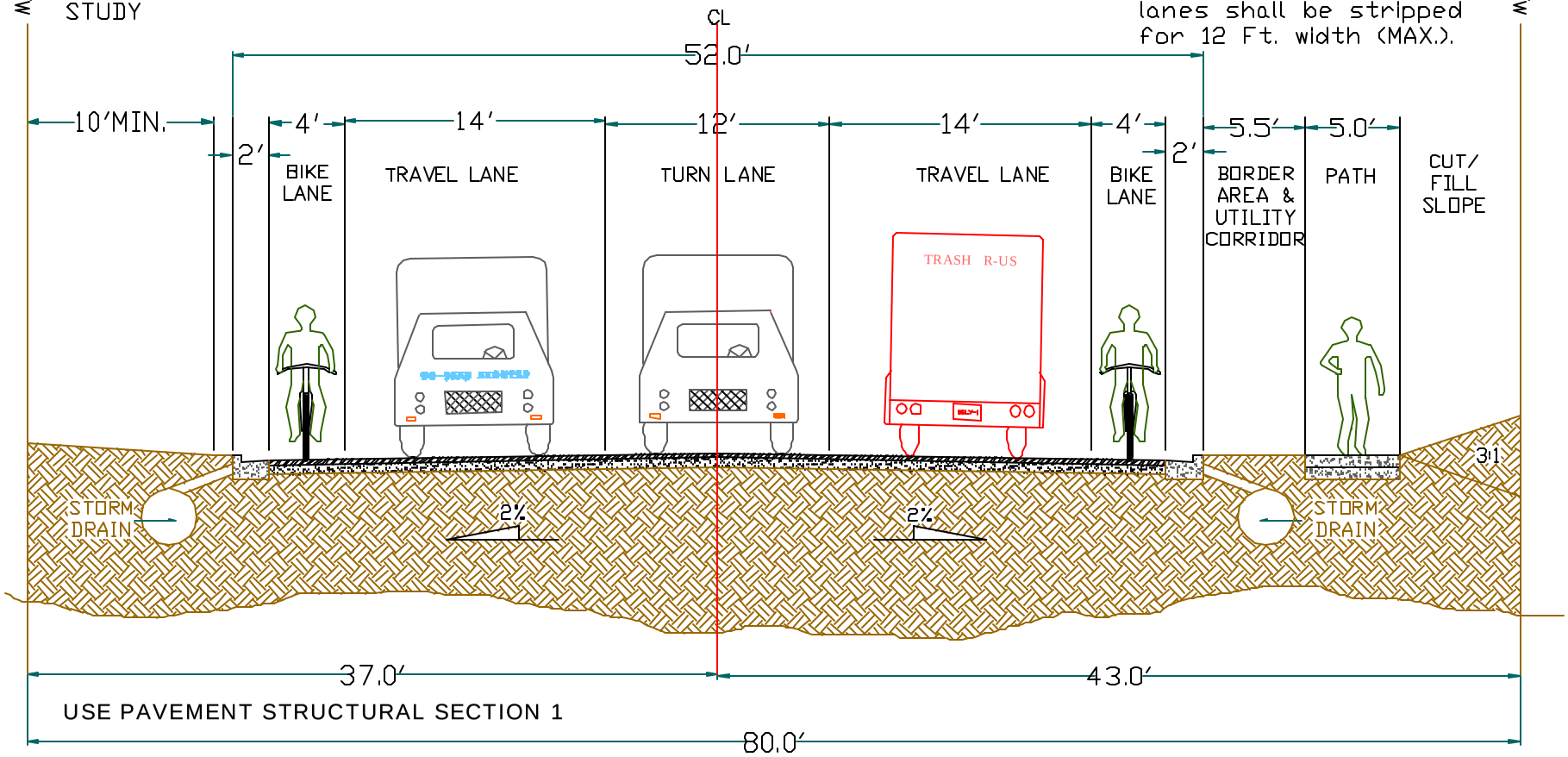

USE PAVEMENT STRUCTURAL SECTION 1

Detail #
4-F

COCONINO COUNTY ROAD STANDARDS
MINOR COLLECTOR ROAD with 2-WAY LEFT TURN LANE

OPTION

NO SCALE
DRAWN:
APRIL 2004

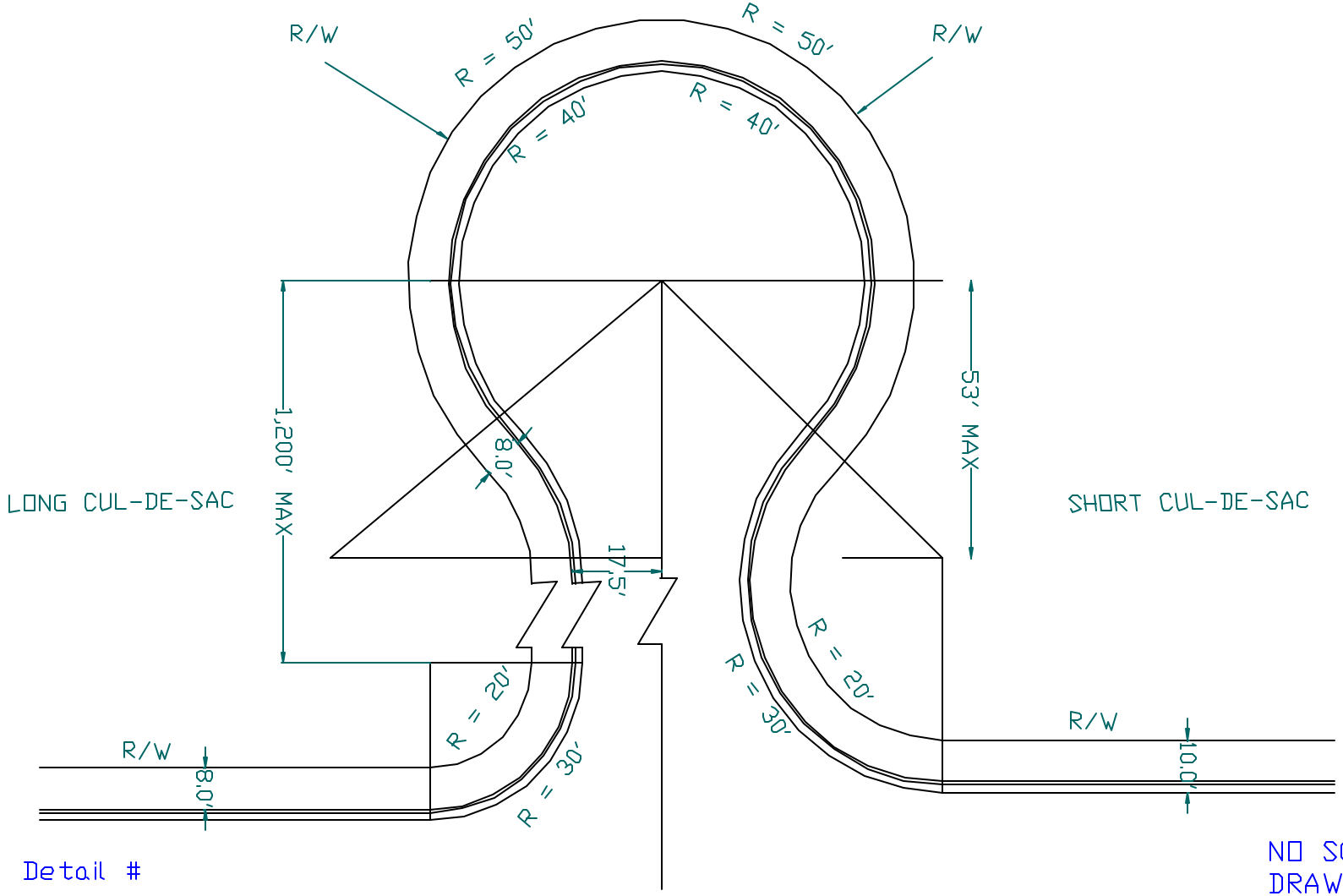

Detail #
CDS

NO SCALE
DRAWN: APRIL 2004

COCONINO COUNTY ROAD STANDARDS

TYPICAL CUL-DE-SAC

MINIMUM ACCEPTABLE STANDARD

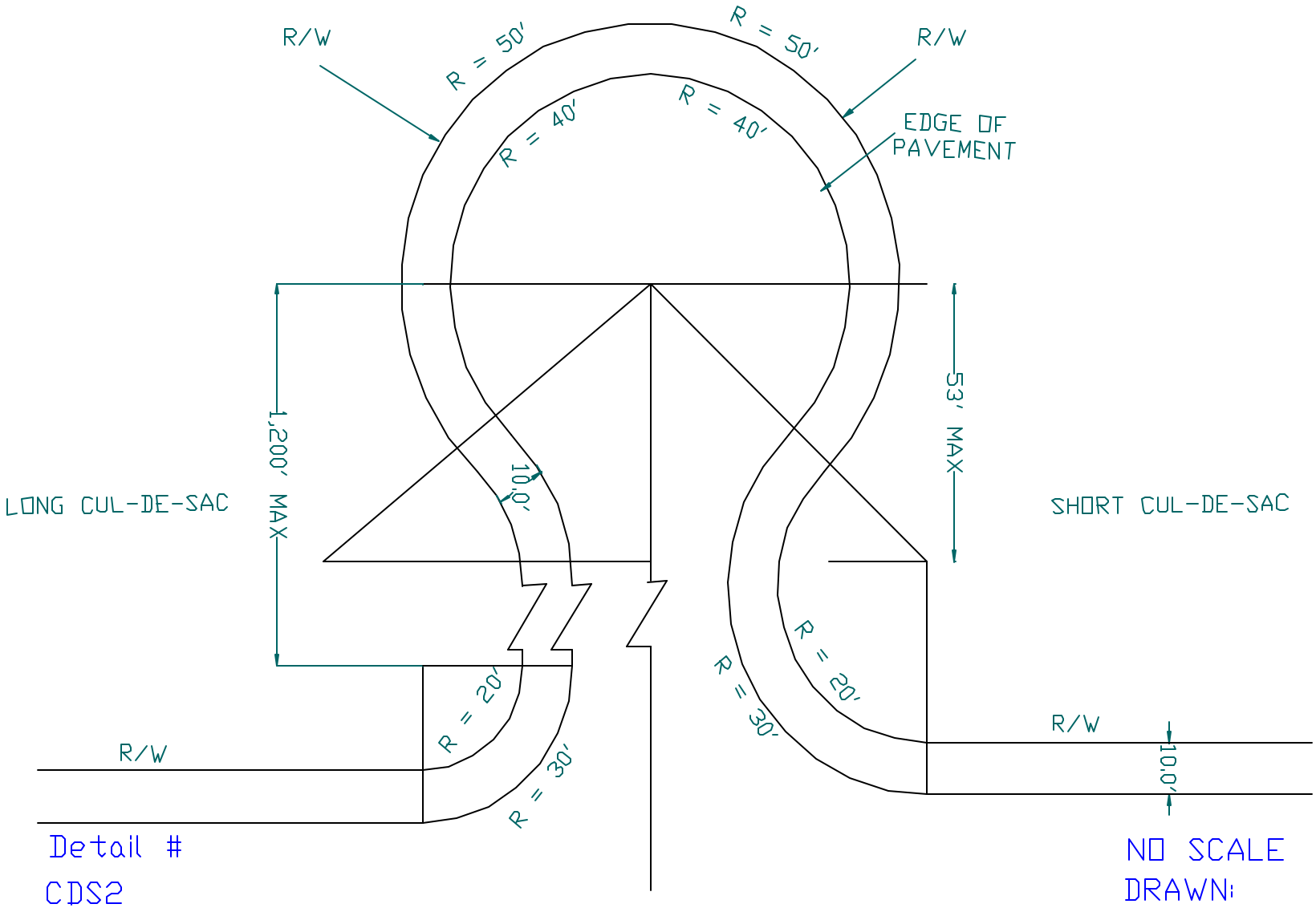

Detail #
CDS2

NO SCALE
DRAWN:
APRIL 2004

COCONINO COUNTY ROAD STANDARDS
CUL-DE-SAC - NO CURB/GUTTER OPTION

MINIMUM RIGHT-OF-WAY: 100'
MINIMUM IMPROVEMENT SURFACE: 51'

MINIMUM DITCH DEPTH: 2'

Note A: If terrain does not allow slopes to fall within R/W, go to next wider R/W.

Note B: Outside lanes to be stripped 12 Ft. (MAX.).

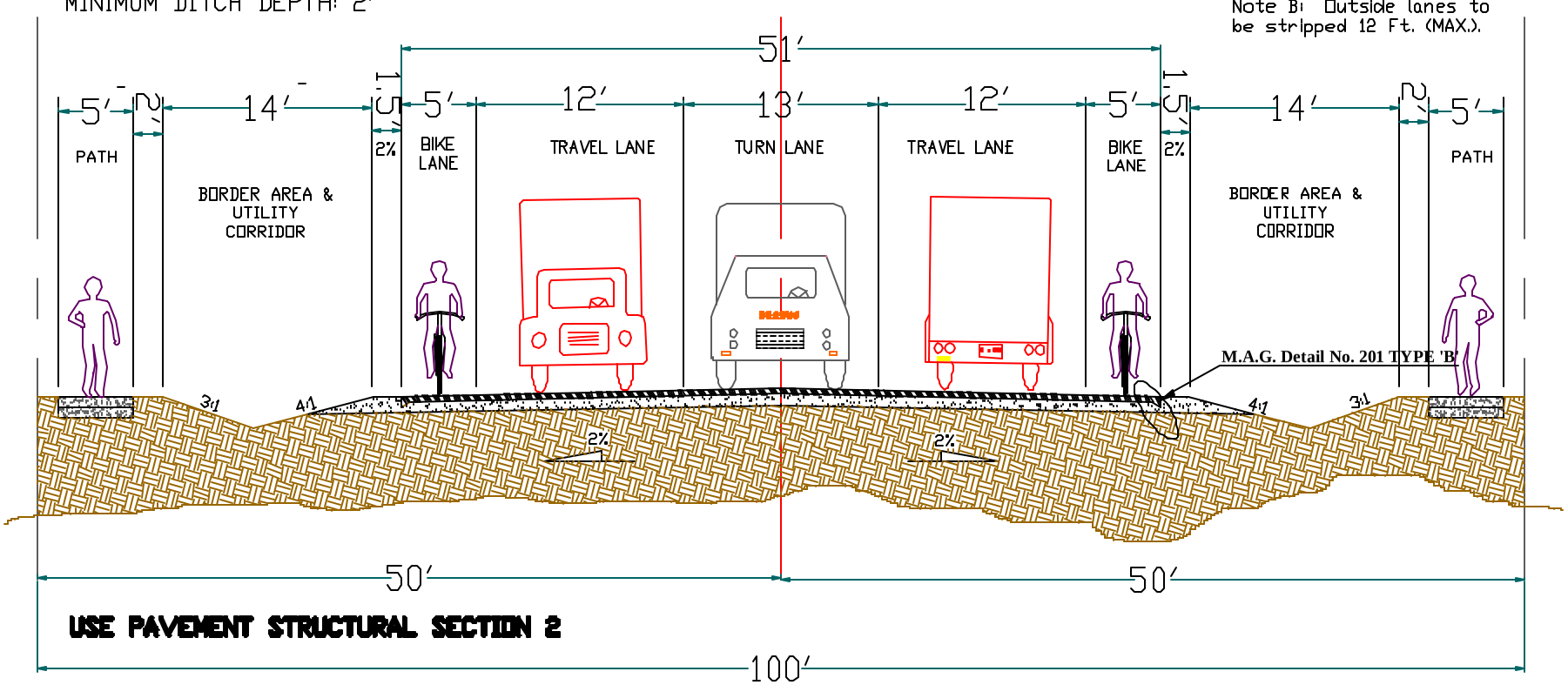

USE PAVEMENT STRUCTURAL SECTION 2

COCONINO COUNTY ROAD STANDARDS
MAJOR COLLECTOR - NO CURB/GUTTER
WITH 2-WAY LEFT TURN LANE

MIN. ACCEPTABLE STANDARD

NO SCALE

DRAWN: APRIL 2004

Detail # 5-A

MINIMUM RIGHT-OF-WAY: 100'
MINIMUM IMPROVEMENT SURFACE: 41'

FINAL SECTION SELECTION BY TRAFFIC STUDY

Note A: If terrain does not allow slopes to fall within R/W, go to next wider R/W.

Note B: Outside lanes to be stripped 12 Ft. (MAX.).

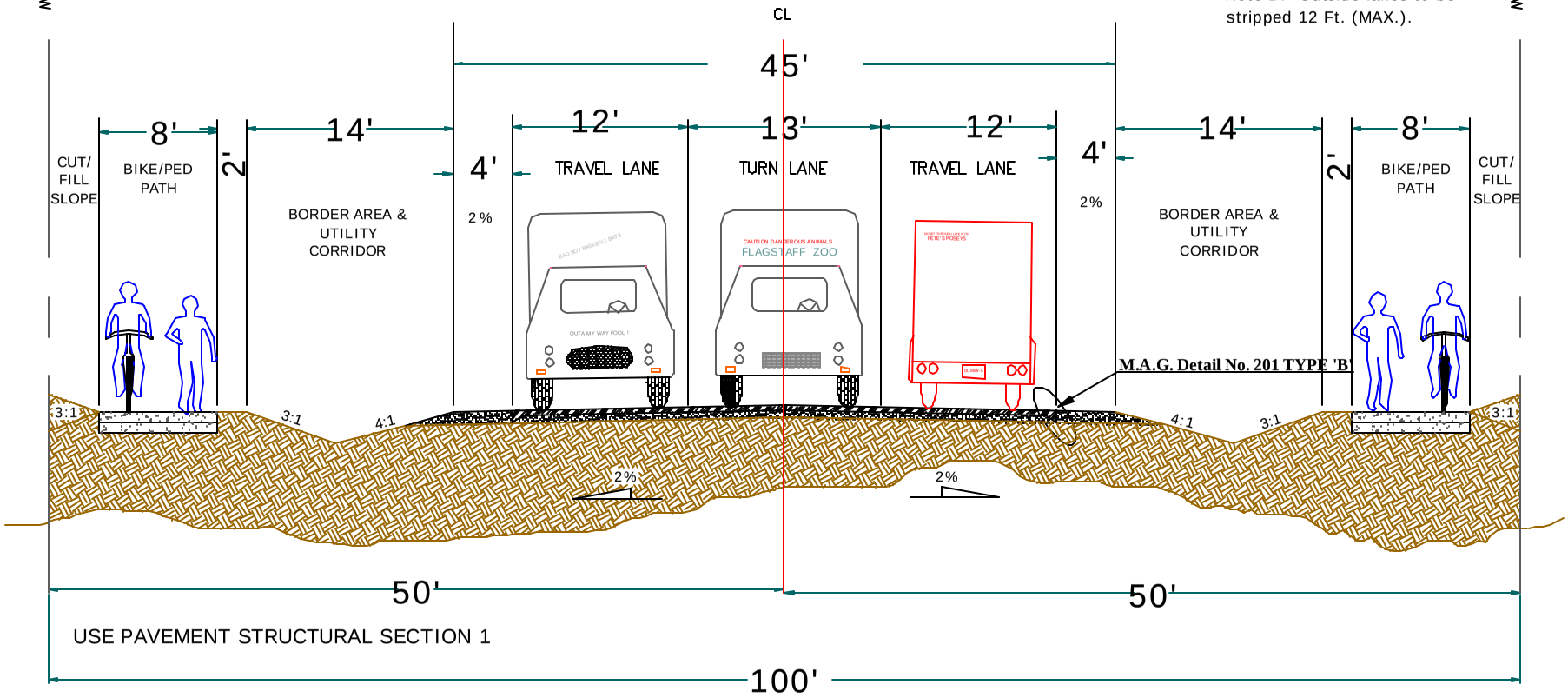

USE PAVEMENT STRUCTURAL SECTION 1

COCONINO COUNTY ROAD STANDARDS

MAJOR COLLECTOR - NO CURB/GUTTER
2-WAY LEFT TURN LANE & SEPARATE BIKE/PED PATH

Detail #
5-B

OPTION

NO SCALE
DRAWN:
APRIL 2004

Note A: If terrain does not allow slopes to fall within R/W, go to next wider R/W.

Note B: Bike lane on one side of road only.

Note C: Outside lanes to be stripped 12 Ft. (MAX.).

MINIMUM RIGHT-OF-WAY: 80'
MINIMUM IMPROVEMENT SURFACE: 45'
MINIMUM BORDER AREA: 10' FROM FACE OF CURB

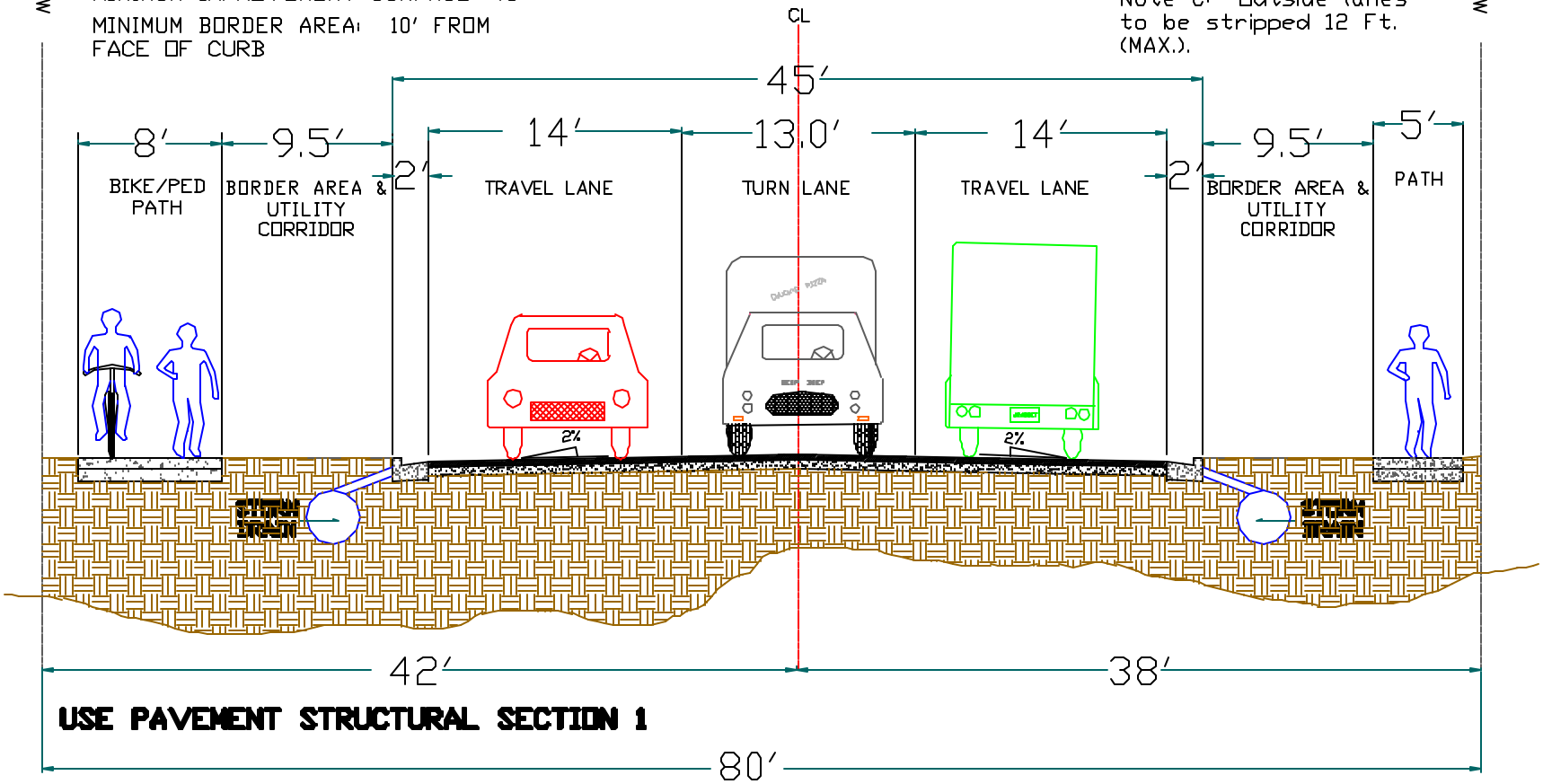

USE PAVEMENT STRUCTURAL SECTION 1

Detail #
5-D

COCONINO COUNTY ROAD STANDARDS
MAJOR COLLECTOR WITH
SEPARATE BICYCLE LANE

NO SCALE
DRAWN:
APRIL 2004

MINIMUM RIGHT-OF-WAY: 80'
MINIMUM IMPROVEMENT SURFACE: 53'

MINIMUM BORDER AREA: 10' FROM FACE OF CURB

FINAL SECTION SELECTION BY TRAFFIC STUDY

Note A: If terrain does not allow slopes to fall within R/W – Additional R/W will be required.

Note B: Path on one side of road only.

Note C: Chip seal coat shall be applied to final paved surface.

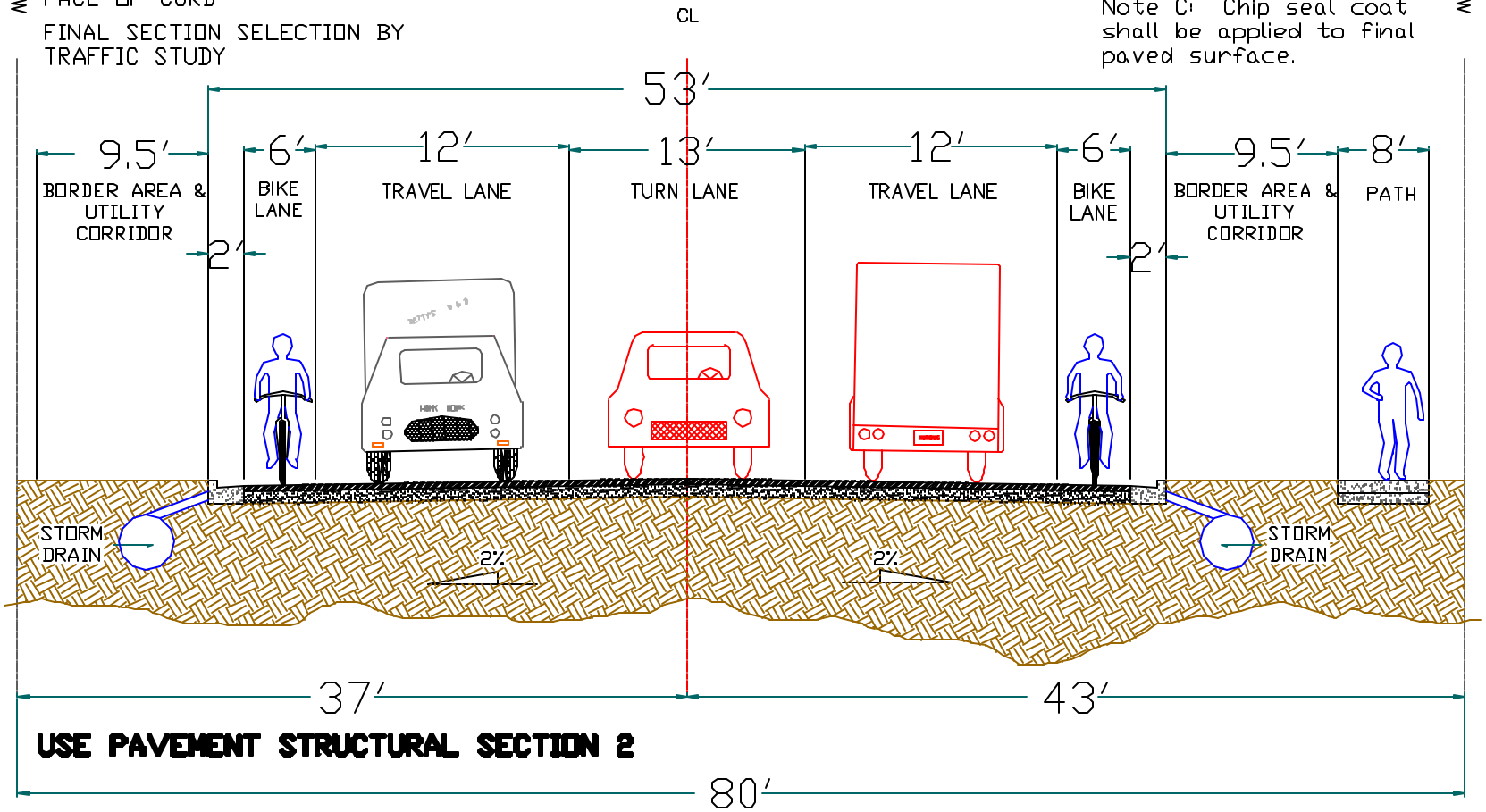

USE PAVEMENT STRUCTURAL SECTION 2

Detail #
5-E

COCONINO COUNTY ROAD STANDARDS
MAJOR COLLECTOR WITH 2-WAY LEFT TURN LANE

OPTION

NO SCALE

DRAWN:
APRIL 2004

MINIMUM RIGHT-OF-WAY: 120'
MINIMUM IMPROVEMENT SURFACE: 70'
MINIMUM BORDER AREA: 10' FROM FACE OF CURB

Note A: If terrain does not allow slopes to fall within R/W - Additional R/W will be required.

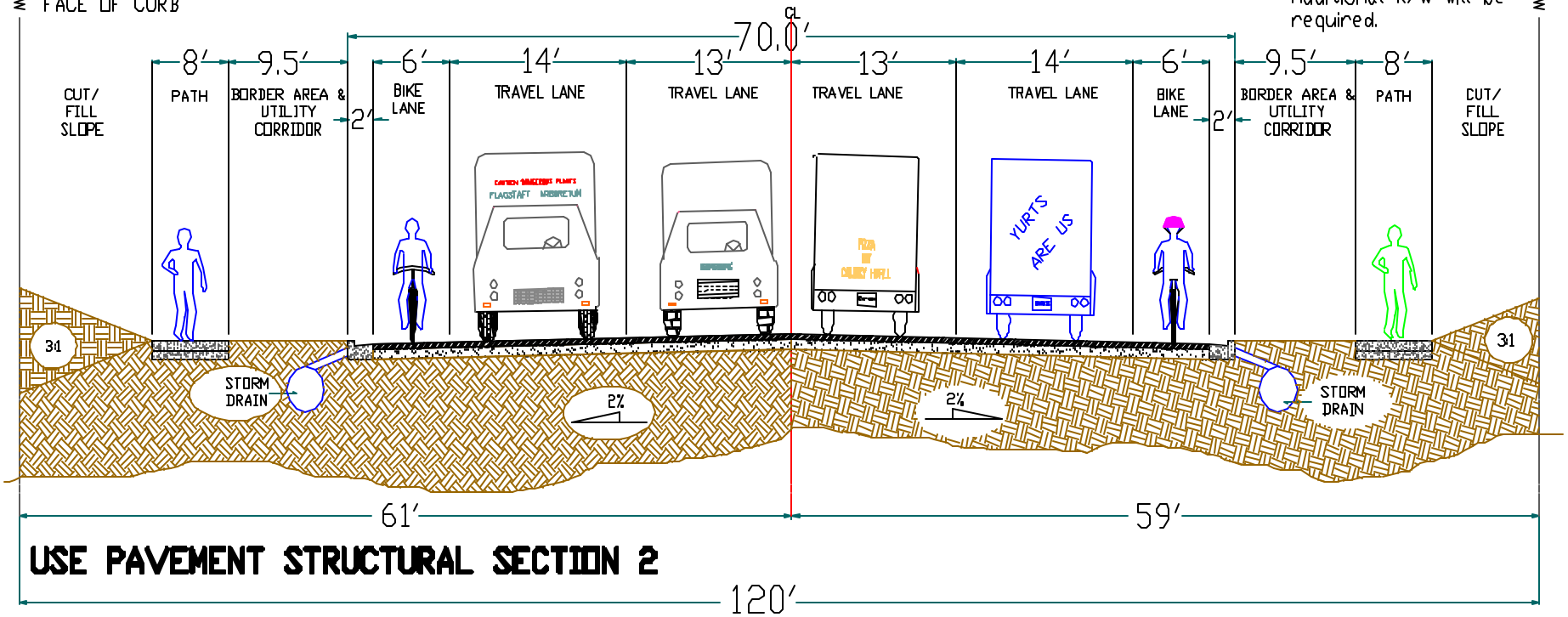

USE PAVEMENT STRUCTURAL SECTION 2

Detail # 6-A

COCONINO COUNTY ROAD STANDARDS

MINOR ARTERIAL ROAD

MINIMUM ACCEPTABLE STANDARD

NO SCALE
DRAWN: APRIL 2004

Chapter VI

GRADING AND EXCAVATION

Section 3304 – PURPOSE

The purpose of this chapter is to safeguard life, limb, property and the public welfare by regulating grading on private property.

Section 3305 – SCOPE

This chapter sets forth rules and regulations to control excavation, grading and earthwork construction, including fills and embankments; establishes the administrative procedure for issuance of permits; and provides for approval of plans and inspection of grading construction. The standards listed below are recognized standards (See Sections 3503 and 3504):

1. Testing

1.1 ASTM D 1557, Moisture-Density Relations of Soils and Soil Aggregate Mixtures

1.2 ASTM D 1556, In Place Density of Soils by the Sand-Cone Method

1.3 ASTN D 2167, In Place Density of Soils by the Rubber-Balloon Method

1.4 ASTM D 2937, In Place Density of Soils by the Drive-Cylinder Method

1.5 ASTM D 2922 and D 3017, In Place Moisture Contact and Density of Soils by Nuclear Methods

Section 3306 – PERMITS REQUIRED

3306.1 Permits Required – Except as specified in Section 3306.2 of this section, no person shall do any grading without first having obtained a grading permit from the building official.

3306.2 Exempted Work – A grading permit is not required for the following:

1. When approved by the building official, grading in an isolated, self-contained area if there is no danger to private or public property.

2. An excavation below finished grade for basements and footings of a building, retaining wall, or other structure authorized by a valid building permit. This shall not exempt any fill made with the material from such excavation or except any excavation having an unsupported height greater than 5 feet (1524 mm) after the completion of such structure.

3. Cemetery graves.

4. Refuse disposal sites controlled by other regulations.

5. Excavations for wells or tunnels or utilities.

6. Mining, quarrying, excavating, processing or stockpiling of rock, sand, grave, aggregate or clay where established and provided for by law, provided such operations do not affect the lateral support or increase the stresses in or pressure upon any adjacent or contiguous property.

7. Exploratory excavations under the direction of soil engineers or engineering geologists.

8. An excavation that is:
   a. Less than 2 feet (610 mm) in depth or
   b. Does not create a cut slope greater than 5 feet (1524 mm) in height and steeper than 1 unit vertical in 11/2 units horizontal (66.7% slope).

9. A fill less than 1 foot (305 mm) in depth and placed on natural terrain with a slope flatter than 1 unit vertical in 5 units horizontal (20% slope), or less than 3 feet (914 mm) in depth, not intended to support structures, that does not exceed 50 cubic yards (38.3 m^3) on any on lot and does not obstruct a drainage course.

Exemption from the permit requirements of this chapter shall not be deemed to grant authorization for any work to be done in any manner in violation of the provisions of this chapter or any other laws or ordinances of this jurisdiction.

Section 3307 - HAZARDS

Whenever the building official determines that any existing excavation or embankment or fill on private property has become a hazard to life and limb, or endangers property, or adversely affects the safety, use or stability of public way or drainage channel, the owner of the property upon which the excavation or fill is located, or other person or agent in control of said property, upon receipt of notice in writing from the building official, shall within the period specified therein repair or eliminate such excavation or embankment to eliminate the hazard and to be in conformance with the requirements of this code.

Section 3308 – DEFINITIONS

For the purposes of this chapter, the definitions listed hereunder shall be construed as specified in this section.

Approval: Shall mean that the proposed work or completed work conforms to this chapter in the opinion of the building official.

As-Graded: Is the extent of surface conditions on completion of grading.

Bedrock: Is in-place solid rock.

Bench: Is a relatively level step excavated into earth material on which fill is to be placed.

Borrow: Is earth material acquired from an off-site location for use in grading on a site.

Civil Engineer: Is a professional engineer registered in the state to practice in the field of civil works.

Compaction: Is the densification of a fill by mechanical means.

Earth Material: Is any rock, natural soil or fill or any combination thereof.

Engineering Geologist: Is a geologist experienced and knowledgeable in engineering geology.

Engineering Geology: Is the application of geologic knowledge and principles in the investigation and evaluation of naturally occurring rock and soil for use in the design of civil works.

Erosion: Is the wearing away of the ground surface as a result of the movement of wind, water or ice.

Excavation: Is the mechanical removal of earth material.

Fill: Is a deposit of earth material placed by artificial means.

Finish Grade: Is the final grade of the site that conforms to the approved plan.

Geotechnical Engineer: See “Soils Engineer”.

Grading: Is any excavating or filling or combination thereof.

Key: Is a designed compacted fill placed in a trench excavated in earth material beneath the toe of a proposed fill slope.

Professional Inspection: Is the inspection required by this code to be performed by the Civil Engineer, Soils Engineer or Engineering Geologist. Such inspections include that performed by persons supervised by such engineers or geologists and shall be sufficient to form an opinion relating to the conduct of the work.

Rough Grade: Is the stage at which the grade approximately conforms to the approved plan.

Site: Is any lot or parcel of land or contiguous combination thereof, under the same ownership, where grading is performed or permitted.

Slope: Is an inclined ground surface the inclination of which is expressed as a ratio of horizontal distance to vertical distance.

Soil: Is naturally occurring superficial deposits overlying bedrock.

Soils Engineer (Geotechnical Engineer): Is an engineer experienced and knowledgeable in the practice of soils engineering (geotechnical) engineering.

Soils Engineering (Geotechnical Engineering): Is the application of the principles of soils mechanics in the investigation, evaluation and design of civil works involving the use of earth materials and inspection or testing of the construction thereof.

Terrace: Is a relatively level step constructed in the face of a graded slope surface for drainage and maintenance purposes.

Section 3309 – GRADING PERMIT REQUIREMENTS

3309.1 Permits Required – Except as exempted in Section 3306 of this chapter, no person shall do any grading without first obtaining a grading permit from the County Engineer or designated staff. A separate permit shall be obtained for each site, and may cover both excavations and fills.

3309.2 Application – The provisions of the 1997 Uniform Building Code in Section 106.3.1 are applicable to grading. Additionally, the application shall state the estimated quantities of work involved.

3309.3 Grading Designation – Grading in excess of 5,000 cubic yards (3825 m^3) shall be performed in accordance with the approved grading plan prepared by a Civil Engineer, and shall be designated as "engineered grading". Grading involving less than 5,000 cubic yards (3825 m^3) shall be designated "regular grading" unless the permittee chooses to have the grading performed as engineered grading, or the building official determines that special conditions or unusual hazards exist, in which case grading shall conform to the requirements for engineered grading.

3309.4 Engineered Grading Requirements – Application for a grading permit shall be accompanied by two sets of plans and specifications, and supporting data consisting of a soils engineering report and engineering geology report. The plans and specifications shall be prepared and signed by an individual licensed by the state to prepare such plans or specifications when required by the County Engineer.

Specifications shall contain information covering construction and material requirements.

Plans shall be drawn to scale upon substantial paper or mylar and shall be of sufficient clarity to indicate the nature and extent of the work proposed and show in detail that they will conform to the provisions of this code and all relevant laws, ordinances, rules and regulations. The first sheet of each set of plans shall give location of the work, the name and address of the owner, and the person by whom they were prepared.

The plans shall include the following information:

1. General vicinity of the proposed site.

2. Property limits and accurate contours of existing ground and details of terrain and area drainage.

3. Limiting dimensions, elevations or finish contours to be achieved by the grading and proposed drainage channels and related construction.

4. Detailed plans of all surface and sub-surface drainage devices, walls, cribbing, dams and other protective devices to be constructed with, or as a part of, the proposed work, together with a map showing the drainage area and the estimated runoff of the area served by any drains.

5. Location of any buildings or structures on the property where the work is to be performed and the location of any buildings or structures on land of adjacent owners that are within 15 feet (4572 mm) of the property or that may be affected by the proposed grading operations.

6. Recommendations included in the soils engineering report and the engineering geology report shall be incorporated in the grading plans or specifications. When approved by the building official, specific recommendations contained in the soils engineering report and the engineering geology report, which are applicable to grading, may be included by reference.

7. The dates of the soils engineering and engineering geology reports together with the names, addresses and phone numbers of the firms or individuals who prepared the reports.

3309.5 – Soils Engineering Report – The soils engineering report required by Section 3309.4 shall include data regarding the nature, distribution and strength of existing soils, conclusions and recommendations for grading procedures and design criteria for corrective measures, including buttress fills, when necessary, and opinion on adequacy for the intended use of sites to be developed by the proposed grading as affected by soils engineering factors, including the stability of slopes.

3309.6 – Engineering Geology Report – The engineering geology report required by Section 3309.4 shall include an adequate description of the geology of the site, conclusions and recommendations regarding the effect of geologic conditions on the proposed development, and opinion on the adequacy for the intended use of sites to be developed by the proposed grading, as affected by geologic factors.

3309.7 – Liquefaction Study – The building official may require a geotechnical investigation in accordance with Sections 1804.2 and 1804.5 of the 1997 Uniform Building Code when, during the course of an investigation, all of the following conditions are discovered, the report shall address the potential for liquefaction:

1. Shallow ground water, 15 feet or less.

2. Unconsolidated sandy alluvium.

3. Seismic Zones 3 and 4.

3309.8 – Regular Grading Requirements – Each application for a grading permit shall be accompanied by a plan in sufficient clarity to indicate the nature and extent of the work. The plans shall give the location of the work, the name of the owner and the name of the person who prepared the plan. The plan shall include the following information:

1. General vicinity of the proposed site.

2. Limiting dimensions and depth of cut and fill.

3. Location of any buildings or structures where work is to be performed, and the location of any buildings or structures within 15 feet (4572 mm) of the proposed grading.

3309.9 – Issuance – The provisions of Section 106.4 of the 1997 Uniform Building Code are applicable to grading permits. The County Engineer may require that grading operations and project designs be modified if delays occur which incur weather-generated problems not considered at the time the permit was issued.

The County Engineer may require professional inspection and testing by the soils engineer. When the building official has cause to believe that factors may be involved, the grading will be required to conform to engineered grading. Hourly wages and fringe benefits of the employees involved.

Section 3310 – GRADING FEES

3310.1 – General – Fees shall be assessed in accordance with the provisions of this section or shall be as set forth in the fee schedule adopted by the

3310.2 – Plan Review Fees – The County Engineer shall have the discretion to require or wave formal submission of engineered plans for grading. If engineered plans are required they shall conform to the requirements in the Coconino County Engineering Design & Construction Criteria Manual. The fees required to review engineered grading and excavation plans shall be:

Initial Review	$100.00 per plan sheet
Second Review	$100.00 per plan sheet
Third Review	$200.00 per plan sheet
Fourth Review	$300.00 per plan sheet
Fifth Review	$400.00 per plan sheet
Increase By	$100.00 for each subsequent review

The plan review fee shall be paid at the time of submission. (Fees authorized by Board Resolution on 11-06-2000).

3310.3 Grading Permit Fees – A fee for each grading permit shall be paid to the Coconino County Public Works Department as set forth in Table A-33-B. Separate permits and fees shall apply to retaining walls or major drainage structures as required elsewhere in this code. There shall be no separate charge for standard terrace drains and similar facilities.

TABLE A-33B --- GRADING PERMIT FEES

VOLUME	FEE ($)
500 CUBIC YDS or LESS	$25
500+ to 2000 CUBIC YDS	$50
OVER 2000 CUBIC YDS	$100

OTHER INSPECTIONS AND FEES

1. Inspections outside of normal busness hours ---------- $75/hr.
   (minimum charge – two hours)
2. Reinspection fees assessed under provisions of sec. 108.8 ---------- $150/hr.
3..Inspections for which no fee is specifically indicated ---------- $75/hr.

NOTE: Associated costs incurred by the County (if any) during the course of inspections will be added to inspection fees – these may include (but shall not be limited to) wages for additional personnel or consultants, equipment, overhead, fringe benefits, etc.

Section 3311 – BONDS

The building official may require bonds in such form and amounts as may be deemed necessary to ensure that the work, if not completed in accordance with the approved plans and specifications, will be corrected to eliminate hazardous conditions.

In lieu of a surety bond the applicant may file a cash bond or instrument of credit with the building official in an amount equal to that which would be required in the surety bond.

See Appendix Two for standard forms for Performance Bonds.

Section 3312 – CUTS

3312.1 – General – Unless otherwise recommended in the approved soils engineering or engineering geology report, cuts shall conform to the provision of this section.

In the absence of an approved soils engineering report, these provisions may be waived for minor cuts not intended to support structures.

3312.2 – Slope – The slope of cut surfaces shall be no steeper than is safe for the intended use and shall be no steeper than 1 unit vertical in 3 units horizontal (50% slope) unless the permittee furnishes a soils engineering or an engineering geology report, or both, stating that the site has been investigated and giving an opinion that a cut at a steeper slope will be stable and not create a hazard to public or private property.

Section 3313 – FILLS

3313.1 – General – Unless otherwise recommended in the approved soils engineering report, fills shall conform to the provisions of this section. In the absence of an approved soils engineering report, these provisions may be waived for minor fills not intended to support structures.

3313.2 – Preparation of Ground – Fill slopes shall not be constructed on natural slopes steeper than 1 unit vertical in 4 units horizontal (25%) slope). The ground surface shall be prepared to receive fill by removing vegetation, non-complying fill, topsoil and other unsuitable materials scarifying to provide a bond with the new fill and, where slopes are steeper than 1 unit vertical in 5 units horizontal (20% slope) and the height is greater than 5 feet (1524 mm), by benching into sound bedrock or other competent material as determined by the soils engineer. The bench under the toe of a fill on a slope steeper than 1 unit vertical in 5 units horizontal (20% slope) shall be at least 10 feet (3048 mm) wide. The area beyond the toe of fill shall be sloped for sheet overflow or a paved drain shall be provided. When fill is to be placed over a cut, the bench under the toe of fill shall be at least 10 feet (3048 mm) wide but the cut shall be made before placing the fill and acceptance by the soils engineer or engineering geologist or both as a suitable foundation for fill.

3313.3 – Fill Material – Detrimental amounts of organic material shall not be permitted in fills. Except as permitted by the County Engineer, no rock or similar irreducible material with a maximum dimension greater that 12 inches (305 mm) shall be buried or placed in fills.

Exception: The County Engineer may permit placement of larger rock when the soils engineer properly devises a method of placement, and continuously inspects its placement and approves the fill stability.

The following conditions shall also apply:

1. Prior to issuance of the grading permit, potential rock disposal areas shall be delineated on the grading plan.

2. Rock sizes greater than 12 inches (305 mm) in maximum dimension shall be 10 feet (3048 mm) or more below grade, measured vertically.

3. Rocks shall be placed so as to assure filling of all voids with well-graded soil.

3313.4 – Compaction – All fills shall be compacted to a minimum of 90% of maximum density.

3313.5 - Slope – The slope of fill surfaces shall be no steeper than is safe for the intended use. Fill slopes shall be no steeper than 1 unit vertical in 2 units horizontal (50% slope).

Section 3314 – SETBACKS

3314.1 – General – Cut and fill slopes shall be set back from site boundaries in accordance with this section. Setback dimensions shall be horizontal distances measured perpendicular to the site boundary. Setback dimensions shall be as shown in Figure A-33-1.

3314.2 – Top of Cut Slope – The top of cut slopes shall not be made nearer to a site boundary line than one fifth of the vertical height of cut with a minimum of 2 feet (610 mm) and a maximum of 10 feet (3048 mm). The setback may need to be increased for any required interceptor drains.

3314.3 – Toe of Fill Slope – The toe of fill slope shall be made not nearer to the site boundary line than one half the height of the slope with a minimum of 2 feet (610 mm) and a maximum of 20 feet (6096 mm). Where a fill slope is to be located near the site boundary and the adjacent off-site property is developed, special precautions shall bee incorporated in the work as the County Engineer deems necessary to protect the adjoining property from damage as a result of such grading. These precautions may include but are not limited to:

1. Additional setbacks.

2. Provision for retaining or slough walls.

3. Mechanical or chemical treatment of the fill slope surface to minimize erosion.

4. Provisions for the control of surface waters.

3314.4 – Modification of Slope Location – The building official may approve alternate setbacks. The County Engineer may require an investigation and recommendation by a qualified engineer or engineering geologist to demonstrate that the intent of this section has been satisfied.

Section 3315 – DRAINAGE AND TERRACING

3315.1 – General – All drainage design shall conform to the requirements in the Coconino County Drainage design Criteria Manual – in cases of conflict between the Manual and the following sections, the requirements of the Manual shall take precedence. Unless otherwise indicated on the approved grading plan, drainage facilities and terracing shall conform to the provisions of this section for cut or fill slopes steeper than 1 unit vertical in 3 units horizontal (33.3% slope).

3315.2 – Terrace – Terraces at least 6 feet (1829 mm) in width shall be established at not more than 30-foot (9144 mm) vertical intervals on all cut or fill slopes to control surface drainage and debris except that where only one terrace is required, it shall be a mid-height. For cut or fill slopes greater than 60 feet (18 288 mm) and up to 120 feet (36 576 mm) in vertical height, one terrace at approximately mid-height shall be 12 feet (3658 mm) in width. Terrace widths and spacing for cut and fill slopes greater than 120 feet (36 576 mm) in height shall be designed by the civil engineer and approved by the County Engineer. Suitable access shall be provided to permit proper cleaning and maintenance.

Swales or ditches on terraces shall have a minimum gradient of 5 percent and must be paved with reinforced concrete not less than 3 inches (76 mm) I thickness or an approved equal paving. They shall have a minimum depth at the deepest point of 1 foot (305 mm) and a minimum paved width of 5 feet (1524 mm).

A single run of swale or ditch shall not collect runoff from a tributary area exceeding 13,500 square feet (1524. M2) (projected) without discharging into a down drain.

3315.3 – Sub-Surface Drainage – Cut and fill slopes shall be provided with sub-surface drainage as necessary for stability.

3315.4 – Disposal – All drainage facilities shall be designed to carry waters to the nearest practicable drainage way approved by the County Engineer or other appropriate jurisdiction as a safe place to deposit such waters. Erosion of ground in the area of discharge shall be prevented by installation of non-erosive downdrains or other devices.

Building pads shall have a drainage gradient of 2 percent toward approved drainage facilities, unless waived by the building official.

Exception: The gradient from the building pad may be 1 percent if all of the following conditions exist throughout the permit area:

1. No proposed fills are greater than 10 feet (3048 mm) in maximum depth.

2. No proposed finish cut or fill slope faces have a vertical height in excess of 10 feet (3048 mm).

3. No existing slope faces steeper than 1 unit vertical in 10 units horizontal (10% slope) have a vertical height in excess of 10 feet (3048 mm).

3315.5 – Interceptor Drains – Paved interceptor drains shall be installed along the top of all cut slopes where the tributary drainage area above slopes toward the cut and has a drainage path greater than 40 feet (12 192 mm) measured horizontally. Interceptor drains shall be paved with a minimum of 3 inches (76 mm) of concrete or gunite and reinforced. They shall have a minimum depth of 12 inches (305 mm) and a minimum paved width of 30 inches (762 mm) measured horizontally across the drain. The slope of drain shall be approved by the County Engineer.

Section 3316 – EROSION CONTROL

3316.1 – Slopes – The faces of cut and fill slopes shall be prepared and maintained to control against erosion. This control may consist of effective planting. The protection for the slopes shall be installed as soon as practicable and prior to calling for final approval. Where cut slopes are not subject to erosion due to the erosion-resistant character of the materials, such protection may be omitted.

3316.2 – Other Devices – Where necessary, check dams, cribbing, riprap or other devices or methods shall be employed to control erosion and provide safety.

ADEQ REQUIREMENTS (Storm Water)

***Goal**: To reduce or eliminate stormwater pollution, from construction activity through development and implementation* of *an appropriate stormwater pollution prevention plan*

AZPDES General Permit for Stormwater Discharges from Large and Small Activity

How to Comply

Permit number: AZG2003-001
Permit term: Feb 28, 2003 to Feb 28, 2008

March 2003
Publication No. C 03-01

Contacts for Further Information

ADEQ Offices
Phoenix: Gila, La Paz, Maricopa" Pinal and Yuma Counties
Phoenix Office
(602) 771-4665 • (800) 234-5677

Tucson: Cochise, Graham, Greenlee, Pima and Santa Cruz Counties
Southern Regional Office
(520) 628-6733 • (888) 271-9302
Flagstaff: Apache, Coconino, Mohave, Navajo and Yavapai Counties
Northern Regional Office
(928) 779-0313 • (877) 602-3675

Community Liaisons

ADEQ has community liaisons located, throughout the state to assist residents in rural communities. To find out how to contact the community liaison nearest you, call the regional office in your area.

Downloadable copies of the general permit and associated forms and information on stormwater pollution prevention plans and best management practices may be found on the storm water pages of the ADEQ Web site at
WWW.adeq.state.az.us.

http://www.adeq.state.az.us/environ/water/permits/stormwater.html#const

Who Must Apply?

Operators of construction activities that disturb 1 acre or greater are required to submit a notice of intent, or NOI, to obtain authorization under this general permit. Operators of construction activities that: disturb less than 1 acre but are part of a larger development must also submit an NOI.

What Do I Need to Do?

Obtain a copy of the general permit and NOI. Copies of the permit, the NOI form and instructions may be found on the stormwater pages of ADEQ's Website at www.adeq.state.az.us or call (602) 771-4428 or, toll free in Arizona, (800) 234-5677.

Prepare a stormwater pollution prevention plan that:

- Provides a site description identifying all sources of pollution associated with onsite construction activities
- Identifies the appropriate measures you will implement to reduce pollutants in stormwater discharges

Carefully complete the NOI form, providing all requested information. Failure to do so will delay, or prevent your ability to discharge under this, permit.

Before starting construction, submit the NOI to ADEQ by fax, certified mail or hand-delivery or use the SMART NOI system to apply for permit coverage.

Implement the stormwater pollution prevention plan prior to and during construction. If the discharge occurs near unique or impaired waters, the operator must submit the stormwater pollution prevention plan with the NOI.

When Am I Authorized to Discharge? "

- Typically authorization is granted two business days after ADEQ receives the NOI. ADEQ will send applicants an authorizing certificate which must be posted at the construction site.

- Authorization to discharge is not automatic. If discharges occur near unique or impaired waters, the NOI is incomplete or incorrect, or if the discharges are not eligible under this general permit, ADEQ will contact you concerning your options.

- Operators/owners of constructions sites must apply for coverage as follows:

  ⇨ ***Existing large construction activities*** must submit NOI and develop SWPPP per new, GP before May 28, 2003. If the construction activity will be completed before May 28, 2003, this is not required.

  ⇨ ***New large construction activities*** must ensure ADEQ receives the NOI at least two business days before construction starts. (No activities should have started between Feb. 17,2003 and March 5,2003.)

  ⇨ ***Existing small construction activities*** (started before March 10, 2003) must submit NOI and develop SWPPP by May 28,2003. If construction activity will be completed before May 28, 2003, the operator is not required to apply for coverage.

  ⇨ ***New small construction activities*** (as of March 10, 2003) must develop a SWPPP per new GP and ensure that ADEQ receives the NOI at least two business days before construction starts.

What Happens When Construction is Complete?

- Complete the notice of termination or NOT form and submit to ADEQ within 30 days after cessation of construction activities and final stabilization of the site.

Options for Controlling Pollutants at *Small Construction Sites*

Sediment and Erosion Control

To prevent erosion through soil protection and preservation

- Preserve existing trees where possible and minimize vegetation disturbance
- Plant or seed temporary or permanent vegetation
- Apply mulch or geotextile ground cover
- Apply sod stabilization
- Use vegetative buffer strips
- Contour and protect sensitive areas

Structural Practices

To divert, store or limit runoff

- Tilt fences
- Earthen dikes
- Drainage swales
- Check dams
- Subsurface drains'
- Pipe slope drains
- Level spreaders
- Storm drain inlet protection
- Sediment traps
- Temporary or permanent sediment basins

Stormwater Management

To reduce pollutant discharges after construction activities cease

- On-site filtration
- Flow attenuation by vegetation or natural depressions
- Devices to dissipate velocity
- Retention structures/artificial wetlands

Housekeeping Best Management Practices

To prevent pollutant discharges from equipment and construction materials

- Proper waste management
- Control of wastewater

Protected product storage area

Section 3317 – GRADING INSPECTION

3317.1 – General – Grading operations for which a permit is required shall be subject to inspection by the building official.

Professional inspection of grading operations shall be provided by the civil engineer, soils engineer and the engineering geologist retained to provide such services in accordance with Section 3317.5 for engineered grading and as required by the building official for regular grading.

3317.2 – Civil Engineer – The civil engineer shall provide professional inspection within such engineer's area of technical specialty, which shall consist of observation and review as to the establishment of line, grade and surface drainage of the development area. If revised plans are required during the course of the work they shall be prepared by the civil engineer.

3317.3 – Soils Engineer – The soils engineer shall provide professional inspection within such engineer's area of technical specialty, which shall include observation during grading and testing for required compaction. The soils engineer shall provide sufficient observation during the preparation of the natural ground and placement and compaction of the fill to verify that such work is being performed in accordance with the conditions of the approved plan and the appropriate requirements of this chapter. Revised recommendations relating to conditions differing from the approved soils engineering and engineering geology reports shall be submitted to the permittee, the building official and the civil engineer.

3317.4 – Engineering Geologist – The engineering geologist shall provide professional inspection within such engineer's area of technical specialty, which shall include professional inspection of the bedrock excavation to determine if conditions encountered are in conformance with the approved report. Revised recommendations relating to conditions differing from the approved engineering geology report shall be submitted to the soils engineer.

3317.5 – Permittee – The permittee shall be responsible for the work to be performed in accordance with the approved plans and specifications and in conformance with the provisions of the code, and the permittee shall engage consultants, if required, to provide professional inspections on a timely basis. The permittee shall act as a coordinator between the consultants, the contractor and the building official. In the event of changed conditions, the permittee shall be

responsible for informing the building official of such change and shall provide revised plans for approval.

3317.6 – County Engineer od designated staff – The County Engineer shall inspect the project at the various stages of work requiring approval to determine that adequate control is being exercised by the professional consultants.

3317.7 – Notification of Noncompliance – If, in the course of fulfilling their respective duties under this chapter, the civil engineer, the soils engineer or the engineering geologist finds that the work is not being done in conformance with this chapter or the approved grading plans, the discrepancies shall be reported immediately in writing to the permittee and to the building official.

3317.8 – Transfer of Responsibility – If the civil engineer, the soils engineer, or the engineering geologist of record is changed during grading, the work shall be stopped until the replacement has agreed in writing to accept their responsibility within the area of technical competence for approval upon completion of the work. It shall be the duty of the permittee to notify the building official in writing of such change prior to the recommencement of such grading.

Section 3318 – COMPLETION OF WORK

3318.1 – Final Reports – Upon completion of the rough grading work and at the final completion of the work, the following reports and drawings and supplements thereto are required for engineered grading of when professional inspection is performed for regular grading, as applicable.

1. An as-built grading plan prepared by the civil engineer retained to provide such services in accordance with Section 3317.5 showing original ground surface elevations, as-graded ground surface elevations, lot drainage patterns, and the locations and elevations of surface drainage facilities and of the outlets of sub-surface drains. As constructed locations, elevations and details of sub-surface drains shall be shown as reported by the soils engineer.

   Civil engineers shall state that to the best of their knowledge the work within their area of responsibility was done in accordance with the final approved grading plan.

2. A report prepared by the soils engineer retained to provide such services in accordance with Section 3317.2, including locations and elevations of field density tests, summaries of field and laboratory tests, other substantiating data, and comments on any changes made during grading and their effect on the recommendations made in the approved soils engineering investigation report.

   Soils engineers shall submit a statement that, to the best of their knowledge, the work within their area of responsibilities is in accordance with the approved soils engineering report and applicable provisions of this chapter.

3. A report prepared by the engineering geologist retained to provide such services in accordance with Section 3317.5, including a final description of the geology of the site and

any new information disclosed during the grading and the effect of same on recommendations incorporated in the approved grading plan. Engineering geologists shall submit a statement that, to the best of their knowledge, the work within their area of responsibility is in accordance with the approved engineering geologist report and applicable provisions of this chapter.

4. The grading contractor shall submit in a form prescribed by the County Engineer a statement of conformance to said as-built plan and the specifications.

3318.2 – Notification of Completion – The permittee shall notify the County Engineer when the grading operation if ready for final inspection. Final approval shall not be given until all work, including installation of all drainage facilities and their protective devices, and all erosion-control measures have been completed in accordance with the final approved grading plan, and the required reports have been submitted.

Chapter VII

CONSTRUCTION CRITERIA

APPROVAL

Construction may begin only after all required permits have been issued by regulatory agencies and the construction plans have been approved by the County Engineer.

The County Engineer is Coconino County's direct representative in matters relating to construction activities. Acceptance and approval of the project by the County during and after construction shall be contingent upon the recommendations of the County Engineer. The matters with which the County Engineer shall exercise decision making authority include but are not limited to:

Interpretation of plans and specifications
Interpretation of standards
Interpretation of acceptable practices
Acceptability of materials
Acceptability of workmanship
Conformance of construction with plans and specifications
Conformance of construction with regulations and policies
Questions of safety and hazard mitigation
Traffic control issues

GENERAL CONSIDERATIONS

In general, only two sets of standards and specifications will be utilized and/or accepted as the controlling criteria for construction in Coconino County - they are the most current version of:

The Uniform Standard Specifications for Public Works Construction better known as "M.A.G Specs" (see Modifications to M.A.G Specs by Coconino County) Published by the Maricopa Association of Governments

The Construction Manual for Road and Bridge Construction better known as "ADOT Specs" Published by The Department of Transportation of the State of Arizona

In the absence of approved plans to the contrary, the current version of the MAG Specs shall be the controlling standards and specifications for all construction projects in Coconino County. ADOT Specs or a combination of both may be appropriate for some projects when approved by the County Engineer.

Should conflicts be found between M.A.G or ADOT Specs and the plans and specifications approved by the County Engineer, then the plans and specifications shall take precedence.

Ambiguities and/or conflicts which are not addressed by M.A.G or ADOT Specs or the approved plans and specifications shall be resolved by decision of the County Engineer.

RECORD DRAWINGS REQUIREMENTS (AS BUILT PLANS)

All projects containing public works improvements or work which will become public property in the future shall have record drawings produced prior to acceptance by the County. All subdivision roads whether public or private will be considered as having the potential to become public. Therefore, all subdivisions must have record drawings submitted as a requirement for County acceptance.
Record drawings are intended to provide a record of improvements which can not be easily observed and/or are modifications to the approved plans. Therefore, the following shall be shown on record drawings:

1. All underground improvements and utilities - whether constructed or located.

2. Changes to the approved plans and specifications which are not readily visible to the naked eye including but not limited to pavement locations, utility locations, grade changes, and changes in materials or manufactured items.

3. Changes to the topography shown on the approved plans. Specifically, new topography must be generated for any area in a road or public utility easement or drainage easement where the pre-construction topography was altered.

Record drawings must be "new" drawings produced on high quality mylar. They must contain sufficient information for future observers to locate underground or other non-visible improvements. They must be signed and sealed by an engineer or land surveyor registered in the State of Arizona. "Red-Lined" or hand annotated paper copies of plans will not be accepted. These plans shall be titled or prominently stamped "As Built", or "Record Drawings", or "As Constructed".

Record data verifying conformance with plans and specifications should be submitted in addition to drawings. This data will commonly include reports and test results certified by various testing agencies or professionals which show compliance with regulations or specifications.

TRAFFIC CONTROL

All incidents, public functions, construction and other activities occurring within public road right-of-ways require some level of traffic control. Written traffic control plans will be developed for construction which will take place on any county road or at the direction of the County Engineer. The Coconino County Public Works Department will not permit any activity by its own staff or others to take place on any County Roads without traffic control.

Projects in a County right-of-way utilizing non-county personnel will require a written traffic control plan reviewed and accepted by the County Engineer, utilities, emergency services and other interested parties.

Traffic control plans will conform to the following principals:

- The safety of the public and construction personnel takes precedence over all other considerations.
- Provision for access by emergency response vehicles must be in place at all times.
- Access to adjoining properties must be available at all times.
- Schools, hospitals, and other public service organizations must be made aware of the project and its probable effect on their activities prior to starting construction.
- Traffic control will utilize and conform to the Manual on Uniform Traffic Control Devices (MUTCD), published by the U.S. Department of Transportation, Federal Highway Administration and the project general specifications (if any).

ROADS

The controlling criteria for the construction of roads in Coconino County will be M.A.G Specs, ADOT Specs or a combination of M.A.G and ADOT specs may also be substituted with permission of the County Engineer.

EARTHWORK

Excavation and grading are controlled and permitted by the regulations in Chapter VI of this manual. In general, all earthwork requires issuance of a grading permit prior to beginning work.

The controlling criteria for the construction of earthworks in Coconino County will be M.A.G Specs, ADOT specs or a combination of M.A.G and ADOT specs may be substituted with permission of the County Engineer.

DRAINAGE

The controlling criteria for the construction of drainage facilities in Coconino County will be M.A.G Specs, ADOT Specs or a combination of M.A.G and ADOT specs may be substituted with permission of the County Engineer. In case of conflict between the Coconino County Drainage Criteria Manual and M.A.G or ADOT Specs the Drainage Criteria Manual will take precedence.

TESTING/INSPECTION

The controlling criteria for testing and inspection of construction in Coconino County will be M.A.G Specs, ADOT Specs, the ADOT Materials Testing Manual, or a combination of M.A.G and ADOT specifications may be substituted with permission of the County Engineer.

The County Engineer and County inspectors shall be allowed access at any time to any and all parts of the work and shall be furnished with any information necessary to make a complete and detailed inspection. The owner or his representative shall schedule his operations in such a way as to allow a reasonable amount of time (usually one working day) for engineering inspections of the work and shall notify the county at least 48 hours in advance of the necessity for inspections. The County shall perform the inspections as expeditiously as possible in order that the work may progress in an orderly and continuous manner.

Any work done or materials used without inspection by the County may be cause for the County to withhold approval, acceptance and permits. Such work and materials may be ordered removed and replaced as condition for approval, acceptance and permit – at the owner's expense (unless the County failed to inspect after being given written notice of the necessity for inspection at least 48 hours in advance). Failure to detect and/or reject defective work or materials shall not in any way prevent later rejection when such defects may be discovered nor obligate final acceptance by the County.

All work performed and all materials used shall be in reasonably close conformity to the lines, grades, cross sections, dimensions, material requirements, and tolerances shown on the approved plans and specifications. The County Engineer will determine the limits of reasonably close conformity in each individual case and the County Engineer's judgment shall be final and conclusive. If specific provisions regarding quality control standards are set forth in the approved plans and specifications, they shall be controlling. Any work done or materials used which are judged not in reasonably close conformity by the County Engineer, shall be sufficient cause for the County to withhold acceptance, approval and permits. The County Engineer may impose conditions on non-conforming work for the County acceptance, approval or permit. The owner shall bear all risk for continuing with non-conforming work until it is accepted and the owner shall be responsible for all costs associated with fulfilling the conditions imposed by the County Engineer.

WORK IN COUNTY RIGHTS-OF-WAY AND EASEMENTS

All permitted work shall be done at no expense to the County, and all necessary precautions will be taken to save and keep the County harmless from any liability or responsibility for any accident, loss or damage to persons or property, happening or occurring as the proximate result

of any work performed under the terms of encroachment, grading and excavation, or other County issued permits, and to assume all of said liabilities, and to protect or restore all property both public and private.

All permitted work shall be done in accordance with the requirements of the County Engineer, all applicable provisions of the specifications and the approved plans. The permittee and all other persons engaged in work authorized by County issued permits shall apply all due safety precautions for the protection of persons and property and shall without further orders, erect and maintain all barricades, lights and traffic control devices in accordance with the approved plans and MUTCD.

No streets, roads, or easements will be blocked without written authorization from the Coconino County Public Works Department.

The permittee shall notify the maintenance division of the Coconino County Public Works Department (928-526-2736) on the working day immediately preceding the date work will commence or re-commence after a stoppage. Two working days before beginning construction the permittee must call Blue Stake (1-800-STAKE-IT) and notify the utility answering service of his intentions.

All contractors working with County rights-of-way or easements shall perform their work in such a way as to minimize dirt, dust, trash and other debris or pollution leaving the construction area. Any public or private property that is soiled, damaged or altered in any way shall be restored and maintained to its original condition by the permittee at his sole expense. The owner and/or permittee is responsible for any clean up necessitated by the construction. This responsibility shall include damage resulting from vehicles or machinery utilized by anyone associated with the project including but not limited to contractors, sub-contractors, materials suppliers, etc.

The Coconino County Public Works Department's opinion of the adequacy of clean up and/or repairs shall be final and conclusive. Should the owner and/or permittee fail to perform clean up and/or repairs ordered by the County Public Works Department the County may refuse to accept any or all of the work and may refuse to issue occupancy and/or other required permits.

Materials and equipment may not be stored within County rights-of-way and/or easements without written permission from the Public Works Department.

FINAL ACCEPTANCE

Upon notice from the owner that the entire project is substantially complete, the County Engineer will make a final inspection. If all construction, improvements and materials are found to conform to the approved plans and specifications the County Engineer will accept the project and notify the owner in writing of the acceptance as of the date of the final inspection.

If the inspection discloses any work judged unsatisfactory or incomplete by the County Engineer, the County Engineer will give the owner written notice of the deficiencies. County acceptance, approval and permits will only be given after all deficiencies have been corrected to the satisfaction of the County Engineer.

If the roads are to become public roads, the date of acceptance of improvements by the County Engineer will be the start of a one-year waiting period for County Acceptance of roads into the County public road system. After one year the roads will be inspected for defects. After correction of defects (if any), the County Engineer will issue a letter of approval to the Board recommending acceptance into the public system. The roads will remain the responsibility of the developer or such parties as agree to or assume that responsibility until formal Board acceptance of the roads.

WATER AND SEWER

All work performed or designed under this chapter shall conform to all sections and titles pertaining to and outlined in Part 600 – WATER AND SEWER of the MAG *"UNIFORM STANDARD SPECIFICATIONS AND DETAILS for PUBLIC WORKS CONSTRUCTION".* Except as modified, added, deleted, or otherwise noted by the following:

Section 601 – TRENCH EXCAVATION, BACKFILLING AND COMPACTION

601.4.2 - Bedding

Modified to read:

> Bedding shall consist of **Aggregate Base Course** or alternate material approved by the County Engineer – alternate bedding materials shall be specified on the plans and approved by the County Engineer, and conform to the required test methods of AASHTO, ARIZONA TEST METHODS, or ASTM.

All other items under section 601.4.2 remain in effect.

601.4.7 - Right-of-Way Belonging to Others

Modified to read:

Backfill and compaction outside the limits of the Contracting Agency shall be accomplished in accordance with the owners permit and/or specifications.

601.4.9 - Foundation and Bedding for Electronic, Telephone. . .

Modified to read:

> Foundations and bedding for these underground facilities shall consist of **A**ggregate **B**ase **C**ourse Material, or sand which conforms to the grading requirements of ASTM C-33 for fine aggregate. The foundation depth shall be six inches and bedding depth shall be one foot above the top of the facility. Compaction will be in accordance with Section 601.

Section 610 – WATER LINE CONSTRUCTION

601.3 - Materials

Modified to read:

(A) The 4-inch through 16-inch diameter pipe may be **C-900 PVC** or ductile iron, except where a particular material is specified. All pipe shall be pressure class 200 unless otherwise authorized by the County Engineer.

Delete:

All reference to **Asbestos-cement water pipe and fittings.**

All other items under section 610.3 remain in effect.

610.4 – Construction Methods

Modified to read:

C-900 PVC pipe shall be installed in accordance with AWWA C-901.

Delete:

All reference to **Asbestos-cement water pipe and fittings.**
All reference to **Cast iron pipe.**

All other items under section 610.4 remain in effect.

610.10 – Meter Service Connections

Modified to read:

When plans call for connections from a new water main to an existing water meter, the work shall include new copper pipe or **polyethylene pressure pipe** and fittings except as follows: (no changes beyond this point).

All other items under section 610.10 remain in effect.

610.11 – Fire Line Service Connections

The fire line from the control valves at the main to the detector check valve shall be constructed of **C-900 PVC** or ductile iron pipe to Section 750.

All other items under section 610.11 remain in effect.

Section 615 – SEWER LINE CONSTRUCTION

615.1 – Description

Delete:

All reference to **Vitrified Clay and corresponding Section 743.**

All other items under section 615.1 remain in effect

615.13 – Measurement and Payment

Delete in Part A:

All reference to **Vitrified Clay.**

All other items under section 615.13 remain in effect

Section 625 – MANHOLE CONSTRUCTION AND DROP SEWER CONNECTIONS

625.2 – Materials

Delete:

All reference to **Bricks and corresponding Section 775.**
All other items under section 625.2 remain in effect.

625.3.1 – Manholes

Delete:

All reference to **Bricks and corresponding Section 775.**

All other items under section 625.3.1 remain in effect.

Section 630 – TAPPING SLEEVES, VALVES AND VALVE BOXES ON WATER LINES

630.4 – Tapping Sleeves and Valves

Delete:

All reference to **Asbestos cement.**

All other items under section 630.4 remain in effect.

Section 631 – WATER TAPS AND METER SERVICE CONNECTIONS

631.3.1 – General

Modified to read:

Installation of copper tubing for meter service shall be in accordance with Section 754. **Also, copper tubing placed against bedding or backfill which is detrimental to copper, such as cinders, cinder mix, etc. is required to be sleeved by material approved by the Engineer.**

All other items under section 631.3.1 remain in effect.

Chapter VIII

QUALITY ASSURANCE

This chapter is intended to be useful as a check list by both designers and inspectors.

DESIGN CRITERIA

The following criteria will be examined for conformity with the design standards in the following publications for roadway design:

The Coconino County Road Design Standards Manual

The Coconino County Engineering Design & Construction Criteria Manual

The Coconino County Drainage Design Criteria Manual

The American Association of State Highways and Transportation Officials *(AASHTO) "A Policy on Geometric Design of Highways and Streets"* ***Current Edition***

These criteria will be examined during the pre-design phase

ROADWAYS

1. Classifications (See Road Standards)

2. Horizontal Alignment

   a. Lane Width
   b. Shoulder Width
   c. Superelevations
   d. Design Speed
   e. Sight Distance (Passing & Stopping)
   f. Tapers
   g. Frontage Roads
   h. Horizontal Curves
   i. Intersections
   j. Access Roads
   k. Driveways
   l. Pullouts
   m. Pathways - Pedestrian/Bike/Equestrian
   n. Sidewalks
   o. Bus Bays
   p. Turn Lanes
   q. Medians

r. Alleys
s. Emergency Escape Ramps
t. Rail Road Crossings
u. Parking Lots
v. Roadway Islands
w. Utility Corridors

3. Vertical Alignment

a. Design Speed
b. Sight Distance (Passing & Stopping)
c. Grades
d. Vertical Curves
e. Grade Breaks
f. Vertical Clearances

4. Safety Considerations

a. Guard Rail
b. Slope Flattening
c. Clear zones
d. Roadway Slopes
e. Culvert Extensions
f. Roadway Hazards (i.e., Trees, Mail Boxes, Signs, Sign Post, etc.)

5. Traffic

a. Signing & Striping
b. Signalized Intersections
c. Traffic Volumes

6. Miscellaneous Items

a. Cattle Guards
b. Fences
c. Landscaping
d. Seeding

CHANNELIZATION/DRAINAGE FACILITIES

1. Ditches

2. Retention/Detention Basins

3. Curb/Curb & Gutter/Catch Basins

4. Bridges

a. Structural Excavation
b. Structural Backfill

5. Box Culverts

a. Structural Excavation
b. Structural Backfill

6. Metal Culverts

a. Bedding
b. Backfill Material

7. Downdrains

8. Erosion Controls

9. Storm Drains

DESIGN REVIEW

The following criteria will be examined for conformity with the design standards in the following publications for roadway design:

The Coconino County Engineering Design & Construction Manual

The Coconino County Drainage Design Manual

The American Association of State Highways and Transportation Officials *(AASHTO) "A Policy on Geometric Design of Highways and Streets"* ***Current Edition***

These criteria will be examined after the submission of the construction plans.

ROADWAY

1. Are construction plans complete?

a. Do they include a geometric layout sheet?
b. Do they include plan and profile sheet?
c. Do they include detail sheets where needed?
d. Do they include a design sheet showing typical sections and structural sections?
e. Do they include right-of-way sheet or is ROW shown adequately on other sheets?
f. Do all sheets include a Blue Stake sticker?
g. Is an approved traffic plan included?
h. Do any sheets show benchmarks and other necessary survey control?
i. Are all required agency and utility approvals shown on cover sheet?

DRAINAGE

1. Are construction plans complete?

   a. Do they include a culvert detail sheet?
   b. Do they include storm drain plan and profile sheet?
   c. Do they include erosion control detail sheets where needed?
   d. Do they include a design sheet showing any drainage channel typical section?
   e. Do all sheets include a Blue Stake sticker?
   f. Do they include a utility sheet or are existing an proposed utilities adequately detailed on other sheets?
   g. Are all required agency and approvals shown on cover sheet?
   h. Stormwater polution prevention plan?

CONSTRUCTION REVIEW

The following checklist will be used in the verification of proper engineering construction practices and methods in conjunction with the following publications:

The Coconino County Engineering Design & Construction Manual

The Arizona Department of Transportation "STANDARD SPECIFICATIONS FOR ROAD AND BRIDGE CONSTRUCTION". Latest Edition

The Maricopa Association of Government (M.A.G.) "UNIFORM STANDARD SPECIFICATIONS FOR PUBLIC WORKS CONSTRUCTION". Latest Edition

ROADWAY

1. Grading

   a. Review grading and erosion control plans.
   b. Inspect clearing and grubbing limits, check quantities. Check contract for disposal of firewood and debris.
   c. Monitor salvaging and control to topsoil to ensure proper drainage and erosion control.
   d. Unstable material below subgrade must be undercut, removed and measured for payment. Check with project engineer to establish a need for undercut.
   e. Check contract specifications for undercutting rock at subgrade elevations.
   f. Embankment material to be sampled and tested for compliance in accordance with the appropriate test methods.
   g. Embankment to be placed and compacted full width in layers normally not exceeding 8".
   h. Embankment compaction test done in accordance with the appropriate testing manual.
   i. Subgrade material to be sampled and tested for compliance in accordance with the appropriate test methods.
   j. Subgrade compaction test done in accordance with the appropriate testing manual.
   k. Aggregate Base material to be sampled and tested for compliance in accordance with the appropriate test methods.
   l. Aggregate Base compaction test done in accordance with the appropriate testing manual.

m. Borrow material to be sampled and tested for compliance in accordance with the appropriate test methods.

n. Excavated material (Not drainage or structural).
   1. Waste
   2. Used on project

o. Blasting - check specifications and contract – insure compliance with requirements by fire marshall.

p. Slopes - check plans and conformity to surrounding topo.

2. Asphaltic Concrete

a. Review paving plans.
b. check plans and familiarize for performance grade asphalt type used on project.
c. Surface to be smooth, firmly compacted, and at the correct cross section, grade and alignment. Existing bituminous and concrete bases to be clean and free of loose patches, and tacked. Pre-level uneven surfaces.
d. Sample and test AC in accordance with the proper test procedures and methods.
e. Be aware of the acceptable temperature range of the AC mix. Check temperature frequently.
f. paving Inspector to collect, verify and initial each delivery ticket.
g. Observe loads for proper size, shape, color consistency, complete coating of the aggregates, and a minimal of separation.
h. Paver to maintain a consistent sped to minimize any uneven ripples or patterns.
i. Paver to maintain correct line, grade, and cross slope, and must have automatic controls adjusted to minimize screed bounce or drift.
j. Check mat width, thickness, and yield.
k. Construction joints to be flush and right with adjacent surfaces.
l. Rolling to be continuous as possible and at proper speed. Discuss rolling pattern with Project Engineer and Paving Foreman.
m. Vibratory rolling shall cease before cracking occurs.
n. Cold roll to remove all marks and bumps.
o. Monitor density test to assure adequate compaction.
p. Nuclear density test done in accordance with the appropriate testing manual.
q. Check surface with straightedge for smoothness.

<u>DRAINAGE (Not Including Concrete Structures)</u>

1. Culvert Pipe

a. Review plans and specifications for culvert installation.
b. Check Pipe certifications.
c. Check pipe on site for any damages or defects.
d. Check bedding for proper grade, depth and compaction.
e. Bedding material to be sampled and tested for compliance in accordance with the appropriate test methods, including the resistivity test.
f. Place tongue end of concrete pipe in direction of flow and lap in metal pipes so that flow is over lap.

g. Concrete pipe joints must be tied and wrapped with geotextile. Banding for corrugated metal pipes shall be installed in accordance with the specifications.

h. Backfill material shall be free of large rock and debris
i. Backfill to be sampled and tested for compliance in accordance with the appropriate test methods.
j. Backfill must be placed in accordance with specifications or as directed by the Engineer.
k. Check plans for any drainage excavations; verify and check for quantities.
l. When culvert installation is complete, verify proper alignment of pipe and that pipe is not damaged.

CONCRETE STRUCTURES

a. Check any structural excavations, record quantity.
b. Check reinforcement for proper size, grade, length, number, spacing, form clearance, support, tie bars, mat tie down, lap, and embedment.
c. For concrete placement, check mix, air, and slump.
d. Check form alignment during pour.
e. Check time concrete was batch and allowable time for placement.
f. Check to verify concrete is vibrated properly.
g. Check for proper curing and cold weather protection.
h. Check backfill requirements (structural and regular).
i. Structural backfill shall be sampled and tested for compliance in accordance with the appropriate testing methods.
j. Structural backfill shall be placed, compacted and tested in accordance with the specifications outlined in the special provision.
k. All concrete exposed to frost must have air entranement in the concrete mix.

Project _____ Location _____

Engineer_____ Project Manager _____

Date _____ Date _____

Chapter IX

ADDENDUM TO M.A.G. SPECIFICATIONS

ADDENDUM TO M.A.G. UNIFORM STANDARD SPECIFICATIONS FOR PUBLIC WORKS CONSTRUCTION AND UNIFORM STANDARD DETAILS FOR PUBLIC WORKS CONSTRUCTION

THIS ADDENDUM IS BASED ON MARICOPA ASSOCIATION OF GOVERNMENTS' REVISIONS MADE IN 1980 THROUGH 1991.

EACH CHAPTER NUMBER INDICATES THE TITLE OF M.A.G. SPECIFICATIONS ON WHICH THE CHANGE IS MADE.

PARAGRAPH NUMBER REFERENCES ARE COUNTED FROM THE BEGINNING OF THE RESPECTIVE TITLE.

M.A.G. SPEC. S106.2 - Control of Materials - Samples and Tests of Materials

Third paragraph; revise second sentence to read:

> Unless otherwise specified, samples and tests will be made in accordance with either: the Materials Testing Manual of the Contracting Agency; the standard methods of AASHTO, ASTM, or ADOT, which were in effect and published at the time of advertising for bids.

M.A.G. SPEC. S106.9 – Control of Materials – Certificates

Certificates:

> General:
>
> The contractor shall submit to the Engineer an original or copy of either a Certificate of Compliance or a Certificate of Analysis, as required prior to the use of any materials or manufactured assemblies for which these specifications or the Special Provisions require that such a certificate be furnished.
>
> The Engineer may permit the use of certain materials or manufactured assemblies prior to, or without, sampling and testing if accompanied by a Certificate of Compliance or Certificate of Analysis, as herein specified. Materials or manufactured assemblies for which a certificate is furnished may be sampled and tested at any time, and, if found not in conformity with the requirements of the plans and the specifications, will be subject to rejection, whether in place or not.
>
> Certificate of Compliance:

1. A Certificate of Compliance shall contain the following information.

2. A description of the material supplied.

3. Quantity of material represented by the certificate.

4. Means of material identification, such as label, lot number, or marking.

5. Statement that the material complies in all respects with the requirements of the cited specifications. Certificates shall state compliance with the cited specifications, such as AASHTO M 194, ASTM A 588; or specific table or section of the Arizona Department of Transportation Standard Specifications or Special Provision. Certificates may cite both, if applicable.

6. The name, title and signature of a person having legal authority to bind the manufacturer or the supplier of the material. The date of the signature shall also be given. The name and address of the manufacturer or supplier of the material shall be shown on the certificate. A copy or facsimile reproduction will be acceptable. However, the original certificate shall be made available upon request. The person signing the certificate shall be in one of the following categories:

    a. An officer of a corporation.

    b. A partner in a business partnership or an owner.

    c. A general manager.

    d. Any person having been given the authority in writing by one of the three listed above. The manufacturer or supplier may submit a list of those who are authorized to sign certificates. This list shall be submitted under the name, title, and signature of one of the first three listed above. This list will be kept on file for subsequent certificates received on that project.

Each of the fist four items specified above shall be completed prior to the signing as defined in item five. No certificate will be accepted that has been altered, added to, or changed in any way after the authorized signature has been affixed to the original certificate. However, notations of a clarifying nature, such as project number, contractor, or quantity shipped are acceptable, provided the basic requirements of the certificate are not affected.

The following is a list of materials generally requiring Certificates as specified in the Standard Specifications or by Policy and Procedure Directives. Materials in addition to this list may require a certification, as specified in the project Special Provision. Each of the below items require a Certificate of Compliance, except where a Certificate of Analysis is required as noted.

1. Concrete Admixtures

2. Hydraulic Cement (Certificate of Analysis

3. Fly Ash (Certificate of Analysis)

4. Curing Compounds

5. Lime

6. Guard Rail Materials

7. Concrete and Metal Pipe

8. Reinforcing Steel

9. Prestressing Steel (Certificate of Analysis)

10. Structural Steel (Certificate of Analysis)

11. Structural Metals

12. Steel Piling (Certificate of Analysis)

13. Geosynthetics (Geotextile Fabrics, etc.)

14. Sign Panels and Related Materials

15. Delineators and Markers

16. Raised Pavement Markers

17. Prismatic Reflectors

18. Reflective Sheeting

19. Thermoplastic Stripes and Markings

20. Performed Plastic Pavement Markings

21. Chain Link Cable Barrier

22. Damp Proofing, Water Proofing Materials

23. Joint Materials

24. Materials Used in Spillways, Downdrains, Inlets and Outlets

25. Seeding and Planting Materials

26. Trees, Shrubs and Plants

27. Topsoil (Certificate of Analysis)

28. Bituminous Materials

29. Asphalt-Rubber Material

30. Bearing Pads (Certificate of Analysis)

31. Materials for End-Product Asphaltic Concrete

32. Traffic Controller Assembly (Certificate of Analysis)

33. Paint (Certificate of Analysis)

Certificate of Analysis:

A Certificate of Analysis shall include all the information required in a Certificate of Compliance and, in addition, shall include the results of all tests required by the specifications.

M.A.G. SPEC. S107.7 - Legal Relations and Responsibility to the Public - Barricades and Warning Signs

Add new third paragraph:

The Traffic Barricade Manual referred to under this section and thereafter in the Standard Specifications shall be the ADOT Traffic Control Manual for Highway Construction and Maintenance.

M.A.G. SPEC. S201.1 – Clearing and Grubbing - Description (Modified to Read):

The work under this section shall consist of removing any vegetation, rubbish, debris and any other objectionable material from within the roadway right-of-way, structure construction areas, areas which ditches and channels are to be performed in advance of any grading operations.

All trees, vegetation and objects designated to remain shall be preserved from injury or defacement. Property and landscape shall be protected and restored in accordance with the requirements of subsection 107.

All items under section 201 remain in effect.

M.A.G. SPEC. S205.1 – Roadway Excavation - Description (Modified to Read):

Roadway excavation shall consist of excavating, blasting, drilling, stockpiling, loading, hauling, grading, watering, spreading, compacting and all other associated activities for all

types of materials encountered in constructing the roadway and other road related areas as designated on the project plans; and placement of the excavated material wherever practicable, in embankments as provided under subsection 210 and 211.

M.A.G. SPEC S205.2 – Roadway Excavation - Unsuitable Material (Added to Read):

Except as otherwise may be provided in the Special Provisions, if the contractor encounters potentially hazardous materials at the site such as asbestos, polychlorinated biphenyl (PCB), or hydrocarbon concentrates, the contractor shall immediately stop all affected work, report the condition to the County in writing and take the appropriate health and safety precautions. Upon receipt of any such notice, the County will investigate the conditions. If in fact hazardous materials are present in concentrations in excess of those allowed by applicable Federal, State or local regulations, the County shall suspend all affected work and proceed to have the hazardous material removed or rendered harmless. This may be done by negotiating a Change Order to Change Authorization with the contractor, by means of a separate contract or as the County may otherwise deem expedient. An alternative would be to terminate the affected Work of Agreement.

Once the material has been removed or rendered harmless, the affected work shall be resumed as directed by the County. If any such incident causes or will cause a delay, extension or acceleration which is unreasonable under the contract documents that postpone, extend or in any other manner alter the schedule or completion of all or part of the work, the County shall make or negotiate with the contractor, an adjustment in the contract price or contract time for any changes in the contractor's cost or the time required to perform the work.

M.A.G. SPEC. S211.2 - Fill Construction - Placing

Fourth paragraph; revise last sentence to read:

However, such material shall not be placed within 3 feet of the finished subgrade of the fill.

M.A.G. SPEC. S211.3 - Fill Construction - Compacting

Fifth paragraph; revise last sentence to read:

Each layer shall be compacted to a uniform density of not less than 95 percent, or as directed by the engineer.

Sixth paragraph; revise first sentence to read:

When fill material contains by volume over 25 percent of rock larger than 6 inches in greatest dimension the fill below a plane 4 feet below finished subgrade may be constructed in layers of a loose thickness before compaction not exceeding the maximum size of rock in the material and in no case exceeding 3 feet in thickness.

M.A.G. SPEC. S225.5 – Watering - Payment (Modified to Read):

When the bidding schedule does not contain a contract pay item for furnishing water supply, full compensation for either developing or obtaining an adequate water supply and furnishing all water required for the work shall be considered as included in the prices paid for the various contract items or work requiring the use of water.

All items under section 225 remain in effect.

M.A.G. SPEC. S301.3 - Sub-grade Preparation - Relative Compaction

Revise the paragraph to read:

The subgrade shall be scarified and loosened to a depth of 9 inches. When fill material is required, a layer of approximately 3 inches may be spread and compacted with the subgrade material to provide a better bond. The subgrade cut and fill areas shall be constructed to achieve a uniform soil structure having the following density when tested in accordance with AASHTO T-99, Method A, and T-191 or ASTM D-2922 and D-3017 with the percent of density adjusted in accordance with the rock correction procedures for maximum density determination, standard detail #190, to compensate for the rock content larger than that which will pass a No. 4 sieve.

a. Major streets. . . . . 95 percent, of standard proctor
b. Other streets and traffic ways. . . . . 95 percent, of standard proctor
c. Curbs, gutter, and sidewalks. . . . . 95 percent, of standard proctor

M.A.G. SPEC. S310.2 - Untreated Base - Placing

Fourth paragraph; revise to read:

Untreated base may vary not more than ¼ inch above or below required grade and cross-section.

<u>Untreated base compaction shall be 95% under curb/gutter, sidewalk, driveway and alley entrances, handicap ramps, and catch basins</u>.

M.A.G. SPEC. S311.2 - Soil Cement Base Course - Materials

Revise the second sentence to read:

The soil for the mixture shall consist of the material in the area to be paved, or approved selected material.

Revise the last sentence to read:

The cement content shall be determined by the procedures set forth in AASHTO - T136-50 or ASTM D560-67. The selection of a cement content based on compressive strength requirements without regard to freeze-thaw durability will not be allowed.

M.A.G. SPEC. S311.4 - Soil Cement Base Course - Construction Methods

Second paragraph; add the following:

Soil cement base course shall not be mixed with or placed on any frozen material; at the time of mixing and placing the air temperature, in the shade, shall be 40 degrees and rising. The soil cement base course shall be protected from freezing for a minimum period of seven (7) days.

M.A.G. SPEC. S315.2 - Bituminous Prime Coat - Materials

Revise the paragraph to read:

Bituminous material shall conform to the requirements of Section 712 or 713 for the type and grade specified.

M.A.G. SPEC. S321.3 - Asphaltic Concrete Pavement - Weather and Moisture Conditions

Revise first sentence to read:

Asphalt concrete shall be placed only when the underlying surface is dry, and when the atmospheric temperature in the shade is 40 degrees F, or above, and rising.

M.A.G. SPEC. S321.5 - Asphaltic Concrete Paving - Placing, Spreading and Finishing

Add the following paragraphs after the first paragraph:

Asphalt concrete shall be placed only when the surface upon which it is placed is at least 70 degrees Fahrenheit. The temperature of the asphalt concrete of any course just prior to the dumping of the material from the hauling vehicle shall be at least 290 degrees Fahrenheit or a lower temperature if written approval is given by the Engineer. Compaction and finishing shall be completed before the mix has cooled to 200 degrees Fahrenheit. The Engineer may authorize placement of asphalt concrete upon surfaces whose temperature is 45 degrees Fahrenheit or above, providing the following conditions are met, as well as those mentioned above:

a. The underlying surface is dry.
b. The weather is dry and without threat of precipitation.

M.A.G. SPEC. S321.5.3 - Asphaltic Concrete Pavement - Leveling Course

Fifteenth paragraph; revise the second sentence to read:

An acceptable surface shall not vary more than ½ inch from the lower edge of a 10 foot straightedge when the straightedge is placed parallel to the centerline of the roadway.

M.A.G. SPEC. S321.5.4 - Asphaltic Concrete Pavement - Asphalt Base and Surface Course

Third paragraph; revise third sentence to read:

The transverse surface joints shall be tested with a 10 foot straightedge and shall conform to the requirements herein for acceptable surface tolerance.

M.A.G. SPEC. S321.5.4 - Asphaltic Concrete Pavement - Asphalt Base and Surface Course

Seventh paragraph, (beginning with "The 6 inch strip…):

Delete: entire paragraph.

Add the following paragraph after the 12th paragraph:

Finish rolling shall be started after the pavement has cooled sufficiently to permit removal of the roller marks, and shall be continued in whatever direction is necessary to produce a pavement surface free of indentions.

Fourteenth paragraph; revise the second sentence to read:

An acceptable surface tolerance shall not vary more than ¼ inch from the lower edge of a 10 foot straightedge when the straightedge is placed parallel to the centerline of the roadway.

Fourteenth paragraph; add the following after the second sentence:

The same surface tolerance shall apply at right angles to the centerline where the plans call for a straight transverse grade. An acceptable surface may not vary more than three-eighths of an inch from the lower edge of a 10 foot straightedge when a straightedge is placed at right angles or radially to the centerline where the approved plans call for a uniform transverse finish grade. This surface specification shall not apply where the plans call for a break on transverse grade such as at a roadway crown or swale.

M.A.G. SPEC. S321.6 - Asphaltic Concrete Pavement - Corrective Requirements for Deficiencies

Third paragraph; revise the first sentence to read:

When the deficiency of the pavement thickness exceeds ½ inch, the pavement shall be overlaid on the area affected. In no case shall this overlay be less than one County block or 660 feet whichever is less in length. This overlay shall be placed over the full width of pavement, with a new mat of material specified by the Engineer, equal in thickness to the deficiency but not less than 1 inch in any instance.

M.A.G. SPEC. S321.9 - Asphaltic Concrete Pavement - Payment

Fourth paragraph; revise first sentence to read:

> No payment will be made for any overrun in quantity of asphalt concrete in excess of 10 percent based on actual field measurement of area covered, design thickness, a unit weight determined by the mix design unit weight, and the in-place relative density.

M.A.G. SPEC. S330.2.1 - Asphalt Chip Seal - Materials - Asphalt

Add the following paragraph:

> Emulsified asphalt Type CRS-2P or approved asphalt material shall be used for the chip seal coat.

M.A.G. SPEC. S330.3 - Asphalt Chip Seal - Time of Application and Weather Conditions

Second paragraph; change second sentence to read:

> The ambient air temperature shall be at least 70 degrees Fahrenheit and rising.

Third paragraph; revise to read:

> Asphalt chip seal shall not be performed between October 1, and May 1, unless specifically permitted by the County Engineer.

M.A.G. SPEC. S330.4.8 - Asphalt Chip Seal - Protection to Adjacent Property

> The Contractor shall protect all manhole covers, water valve boxes, and survey monuments, etc., so that no bituminous material or cover material remains on them and the covers can be easily accessed after sweeping. All adjacent sidewalks and driveways shall be swept and maintained clear of loose cover material.

M.A.G. SPEC. S330.7 - Asphalt Chip Seal - Payment

Add after last paragraph:

> No payment shall be made for chips in excess of 10% of the application rate as specified, unless approved by the Engineer.

M.A.G. SPEC. S336.2..4 - Pavement Matching & Surface Replacement - Permanent Pavement Replacement

Seventh paragraph; revise first sentence to read:

> The surface course shall consist of an asphalt concrete material in accordance with Section 710 as specified by the Engineer to match the existing surface.

Last paragraph; revise to read:

Where deep lift asphalt concrete (asphalt concrete base and asphalt concrete wearing course) exists, the base course replacement shall be made in lifts approved by the County Engineer to within 1 ½ inch of the finish grade.

M.A.G. SPEC. S340.2 - Concrete Curb, Gutter, Sidewalk, Driveway and Alley Entrance - Materials

Revise first paragraph to read:

Concrete shall be class A, containing 5 to 7% air entrainment and conforming to applicable requirements of Section 725.

M.A.G. SPEC. S340.3 - Concrete Curb, Gutter, Sidewalk, Driveway and Alley Entrance - Construction Methods

Seventeenth paragraph; after the first sentence, add:

The longitudinal extent of any curb and gutter removal and replacement necessary because of nonconformity with the plans or specification, or because of damage prior to acceptance, shall not be less than the appropriate contraction joint spacing.

M.A.G. SPEC. S342.2.1 - Decorative Pavement - Sand Aggregate Base Course

Revise the paragraph to read:

The sand laying course shall be a clean washed concrete sand conforming to ASTM C-33. The mortar sand shall be a clean washed sand conforming to ASTM C-144. The ABC shall be aggregate base as per M.A.G. Section 702.

M.A.G. SPEC. S342.2.3 - Decorative Pavement - Brick

Revise the paragraph to read:

Brick shall not be used for decorative pavement.

M.A.G. SPEC. S342.2.4 - Decorative Pavement - Header

Revise the paragraph to read:

The header shall be Class A concrete with 5 to 7% air entrainment as per Section 725.

M.A.G. SPEC. 342.3.3 - Decorative Pavement - Sand Laying Course

Revise first paragraph to read:

The thickness of the sand laying course shall be 1 inch. Screeding boards shall be used to ensure a uniform thickness. The sand shall not be compacted or walked on. The sand should be wet enough to cling together when compressed lightly in the hand and not fall apart when the hand is re-opened.

M.A.G. SPEC. S342.3.4 - Decorative Pavement - Concrete Paving Stones

First paragraph; revise to read:

The concrete paving stones shall be installed on the undisturbed sand laying course with gaps of 1/16 to 1/8 of an inch between each stone and adjacent stones or retention curb. After the stones are in place, a plate vibrator compactor shall be used to compact the stones. This will require two passes at 90 degrees to each other. After this operation, approximately ¼ inch of mortar sand will be placed on the stones and a minimum of two passes with the compactor are required. Any excess sand shall be swept into the joints and removed. The completed installation shall be washed down and cleaned. Any cutting of the pavement stone shall be accomplished with a saw.

Second paragraph; revise to read:

The contractor shall lay the paving stones starting from the longest straight line and from a true 90 degree corner. If the corner of the edge retention is not a true 90 degree corner, the paving stones must be laid slightly away (about half the length of a brick) from the edge at a 90 degree angle.

M.A.G. SPEC. S432.3.5 - Decorative Pavement Brick

Delete the entire paragraph.

M.A.G. SPEC. S345.2 - Adjusting Frames, Covers, Valve Boxes, and Water Meter Boxes - Adjusting Frames

Second paragraph; revise the third sentence to read:

Class A concrete with 5 to 7% air entrainment, shall be placed around and under the frames to provide a seal and properly seat the frame at the required elevation and slope.

After the second paragraph; add the following:

When brick is used under manhole frames for adjustment to grade, brick shall be laid radially and continuously around the manhole opening.

For new manholes, the maximum dimension from top of lid to the top of the cone or bottom of flat top shall be 28 inches.

For existing manholes to be raised in previously paved areas, the maximum dimension from the final finished grade to the bottom of the manhole neck shall be 32 inches. It is the

contractor's responsibility to examine each existing manhole and determine the exact nature of the work required to adjust each manhole.

M.A.G. SPEC. S345.3 – Adjusting Frames, Covers, Valve Boxes, and Water Meter Boxes – Adjusting Valve Boxes

Second paragraph; revise second sentence to read:

Any excavated area shall be filled with Class A concrete, with 5 to 7% air entrainment, as per the Standard detail, or as directed by the Engineer.

Third paragraph; revised second sentence to read:

This collar shall be of Class A concrete with 5 to 7% air entrainment.

M.A.G. SPEC. S360.3

Revise Part (B) Item 2:
Minimum depth of 24 inches to read 36 inches.

M.A.G. SPEC. S401.5 – Right-of-Way and Traffic Control – General Traffic Regulations

Eleventh paragraph; revise to read:

The Contractor will reinstall all permanent traffic control devices as required by the approved construction plans and specifications.

Twelfth paragraph:

Delete the last sentence.

M.A.G. SPEC. S405.2 – Monuments – Materials

Second paragraph; revise to read:

All concrete shall be Class A with 5 to 7% entrained air.

M.A.G. SPEC. S505.3 – Concrete Structures – Forms

Tenth paragraph; revise to read:

The Contractor may, with the permission of the Engineer, pour such portions of the concrete for the structure directly against the side of the excavation or sheathing without the use of outside forms, provided that the following conditions are met.

M.A.G. SPEC. SPEC. S505.6 – Concrete Structures – Placing Concrete

First paragraph; after the first sentence, add:

No concrete shall be placed without the approval of the County inspector.

M.A.G. SPEC.S505.6.2 – Concrete Structures – Adverse Weather Concreting

Revise Part (B) to include:

Concrete operations shall not be continued when a descending air temperature in the shade and away from artificial heat falls below 40 degrees Fahrenheit nor shall concrete operations be resumed until an ascending air temperature in the shade and away from artificial heat reaches 35 degrees Fahrenheit.

Mixing and placing concrete shall continue no later in any day than that time which will allow sufficient time to place and protect the concrete already placed before the air temperature drops to 35 degrees Fahrenheit.

Concrete operations may be allowed although the air temperature in the shade and away from artificial heat is below the limit permitted above. Where concrete operations are thus allowed, the contractor shall use equipment to heat the aggregates or water or both, prior to mixing. Aggregates shall be uniformly heated to at least 60 degrees Fahrenheit and shall have no chunks of ice. Equipment used to heat the aggregates shall be such that uniform temperatures are obtained throughout the aggregate within each batch and from one batch to another. Water shall not be heated in excess of 150 degrees Fahrenheit.

The Contractor shall provide adequate insulation or heat or both, to protect the concrete after placement. This protection shall be to the extent required to maintain a temperature under the insulation of the concrete of from 60 to 90 degrees Fahrenheit for a period of 72 hours after placement and from 40 to 90 degrees Fahrenheit for an additional 96 hours. Regardless of the air temperature at the time of mixing and placing concrete, the protection specified above shall be provided at all times when the air temperature is below 35 degrees Fahrenheit.

M.A.G. SPEC. S601.2.9 – Water and Sewer – Trench Excavation, Backfill and Compaction – Shoring and Sheeting

Add a new paragraph after the second paragraph:

It shall be the Contractor's responsibility to provide such trench bracing, sheeting, or shoring as may be necessary to protect existing improvements outside the trench and to support and ensure that the ground alongside the excavation will not slide or settle. Existing improvements outside the trench, either public or private, that are damaged due to lack of adequate trench bracing, sheeting, or shoring shall be removed and replaced in kind at the Contractor's expense.

M.A.G. SPEC. S601.4.3 – Trench Excavation, Backfill and Compaction – Backfill

Revise the second paragraph to read:

Water consolidation (flooding, jetting, etc.) will not be permitted.

Revise the fourth paragraph to read:

When mechanical compaction is used, backfill shall be placed in lifts not exceeding one foot in compacted height regardless of pipe size, material or backfill type.

M.A.G. SPEC. S601.4.4 – Water and Sewer – Trench Excavation, Backfill and Compaction – Compaction Densities

Table 601-2; replace the table with the following table:
TABLE 601-2
MINIMUM DENSITY REQUIRED

Backfill Type	Location	From Subgrade to 2' Below Subgrade	From 2' Below Subgrade to 1' above Top of Pipe	From 1' Above Top of Pipe to Bottom of Trench
I	Under any existing or proposed pavement, curb, gutter, sidewalk, or such construction included in the contract, or when any part of the trench excavation is within 2' of the above.	100% For Granular, 95% for Non-Granular	95%	95%
II	On any utility easement, street, road or alley right-of-way outside limits of (I)	90%	90%	95%
III	Around any structures or exposed utilities	95%	In all cases	

M.A.G. SPEC. S621.3.5 – Bedding

All placement of pipe will require bedding material. All bedding material shall conform to the requirements set forth in M.A.G. Spec 601.4 and any addendum's or other criteria as set forth in this manual.

M.A.G. SPEC. S621.6 – Corrugated Metal Pipe and Arches - Payment (Modified to Read)

Payment will be made at the contract unit price bid per linear foot, to the nearest foot, for each size and type of pipe and shall be compensation in full for furnishing and installing the corrugated metal pipe as specified, including removal of obstructions, excavation, placement

of bedding, backfilling, berm placement, compacting, and all other incidental cost not specifically covered in other items in the proposal.

No measurement or direct payment will be made for furnishing or placing berm material, bedding material, fittings, collars or bands. The cost being considered incidental to the contract item.

All items under Section 621 remain in effect.

M.A.G. SPEC. S702.1 – Base Materials – General

Add the following paragraph after the third paragraph:

The aggregate base course will be clean, free of organic matter, and be of such a nature that it can and will be compacted to a dense, firm layer capable of supporting loaded trucks and self-propelled pavers without rutting. Volcanic cinders shall not be used for base materials.

M.A.G. SPEC. S601.4.2 - Bedding

Modified to read:

Bedding shall consist of **Aggregate Base Course** Material, and conform to the required test methods of AASHTO, ARIZONA TEST METHODS, or ASTM.

All other items under section 601.4.2 remain in effect.

M.A.G. SPEC. S601.4.7 - Right-of-Way Belonging to Others

Modified to read:

Backfill and compaction outside the limits of the Contracting Agency shall be accomplished in accordance with the owners permit and/or specifications.

M.A.G. SPEC. S601.4.9 - Foundation and Bedding for Electronic, Telephone

Modified to read:

Foundations and bedding for these underground facilities shall consist of **A**ggregate **B**ase **C**ourse Material, or sand which conforms to the grading requirements of ASTM C-33 for fine aggregate. The foundation depth shall be six inches and bedding depth shall be one foot above the top of the facility. Compaction will be in accordance with Section 601.

M.A.G. SPEC. S601.3 - Materials

Modified to read:

(A) The 4-inch through 16-inch diameter pipe may be **C-900 PVC** or ductile iron, except where a particular material is specified. All pipe shall be minimum **400** P.S.I. design unless otherwise specified.

Delete:

All reference to **Asbestos-cement water pipe and fittings.**

All other items under section 610.3 remain in effect.

M.A.G. SPEC.S610.4 – Construction Methods

Modified to read:

C-900 PVC pipe shall be installed in accordance with AWWA C-901.

Delete:

All reference to **Asbestos-cement water pipe and fittings.**
All reference to **Cast iron pipe.**

All other items under section 610.4 remain in effect.

M.A.G. SPEC.S610.10 – Meter Service Connections

Modified to read:

When plans call for connections from a new water main to an existing water meter, the work shall include new copper pipe or **polyethylene pressure pipe** and fittings except as follows: (no changes beyond this point).

All other items under section 610.10 remain in effect.

M.A.G. SPEC. S610.11 – Fire Line Service Connections

The fire line from the control valves at the main to the detector check valve shall be constructed of **C-900 PVC** or ductile iron pipe to Section 750.

All other items under section 610.11 remain in effect.

M.A.G. SPEC. S615.1 – Description

Delete:

All reference to **Vitrified Clay and corresponding Section 743.**

All other items under section 615.1 remain in effect

M.A.G. SPEC. S615.13 – Measurement and Payment

Delete in Part A:

All reference to **Vitrified Clay.**

All other items under section 615.13 remain in effect

M.A.G. SPEC. S625.2 – Materials

Delete:

All reference to **Bricks and corresponding Section 775.**
All other items under section 625.2 remain in effect.

M.A.G. SPEC. S625.3.1 – Manholes

Delete:

All reference to **Bricks and corresponding Section 775.**

All other items under section 625.3.1 remain in effect.

M.A.G. SPEC. S630.4 – Tapping Sleeves and Valves

Delete:

All reference to **Asbestos cement.**

All other items under section 630.4 remain in effect.

M.A.G. SPEC. S631.3.1 – General

Modified to read:

Installation of copper tubing for meter service shall be in accordance with Section 754. **Also, copper tubing placed against bedding or backfill which is detrimental to copper, such as cinders, cinder mix, etc. is required to be sleeved by material approved by the Engineer.**

All other items under section 631.3.1 remain in effect.

M.A.G. SPEC. S702.2.2 – Base Materials – Crushed Aggregate – Grading

Table 702; revise as follows:

For aggregate base, the percentage by weight passing the No. 200 sieve shall be limited to no more than 10 percent.

M.A.G. SPEC. S710.2.1 – Asphaltic Concrete – Asphalt

Revise the section to read:

The asphalt to be mixed with the mineral aggregate shall be paving grade asphalt conforming to Section 711 and shall be pg 58-28 unless otherwise specified in the special provisions.

M.A.G. SPEC. S710.2.2 – Asphaltic Concrete – Aggregate

Add the following sentence to the end of the first paragraph:

Volcanic cinders or materials containing clay balls, coated rock or other deleterious materials shall not be used.

M.A.G. SPEC. S710.2.5 – Asphalt Concrete – Job-Mix Formula

Replace the first paragraph with the following:

The Contractor shall furnish the Engineer with a job-mix formula for the asphalt concrete not less than ten (10) days in advance of actual placement of the material. The job-mix formula shall be performed in accordance with ASTM 1559 by the 75 blow method. The job-mix formula shall indicate the percentage and type passing for each specified sieve size of mineral aggregate, the percent asphalt to be used, and the maximum density for each asphalt concrete mixture to be incorporated into the project. The job-mix formula, upon approval of the Engineer, shall be used to establish the standards to which field test results will be compared, and to determine compliance of the materials furnished with all physical properties of the composite mix and its individual components as shown on the approved job-mix formula. The job-mix formula, with the allowable tolerances for a single test, shall be used for job control. Single test variation tolerances are shown in the table.

Add the following before the second paragraph:

The maximum permissible variation in the daily marshall plug unit weight from the unit weight shown in the approved job mix shall be +/- 3%.

Add the following after the second paragraph:

The aggregates and mix to be incorporated into the work shall also meet the following requirements:

TEST *ACCEPTABLE TEST RESULTS*

Absorbed Asphalt Range (ASTM 1559) . . . . . 0 – 1%

Combined Water Absorption (AASHTO T-84) . . . . . 0 – 2.25%

Marshall Stability (ASTM D1559) . . . . . .1800 min.

Flow (ASTM D1559) Units of .01 inches . . . . . 8 - 18

Air Voids Content (mix) . . . . . 3% to 5%

Index of Retained Strength
(AASHTO T165, Section 5.1.3) . . . . . .75% min.

Loss on Abrasion (C131 and/or AASHTO 96) . . . . . .40% max.

All asphaltic concrete shall contain a minimum of 1% Portland cement or dry hydrated lime by weight of total mixture.

M.A.G. SPEC. S716.2.3 – Cover Material – Stone Chips – Gradation

In addition ADOT Spec CM-11 as shown below may be used.

Graduation CM-11

	% of passing sieve
3/8 inch	100
No. 4	0-40
No. 8	0-5
No. 200	0-2.0

M.A.G. SPEC. S725.1.1 – Portland Cement Concrete – Classes of Concrete

Revise Note (1) to read:

As tested in accordance with ASTM C-39. Maximum slump of 4 inches, or as specified in the special provisions, when tested in accordance with ASTM C-143.

Class AA concrete, with 5 to 7% entrained air, shall be used for all valley gutters and as specified.

Class A concrete shall be used for concrete structures, either reinforced or non-reinforced. Additionally, Class A concrete with 5 to 7% entrained air shall be included for all exposed structures.

Class C concrete may be used for thrust blocks, encasements, fill or over excavation, etc.

M.A.G. SPEC. S725.3 – Portland Cement Concrete – Aggregates

First paragraph, after the second sentence; revise to include:

Aggregates must be subjected to five cycles of the sodium sulfate soundness test in accordance with the requirements of AASHTO T-104. The total loss shall not exceed ten percent by weight of the aggregate as a result of the test.

M.A.G. SPEC. S725.5 – Portland Cement Concrete – Water

Last paragraph; revise to include the following:

Water shall be sampled and tested in accordance with AASHTO T-26.

M.A.G. SPEC. S760.1 – Coating Corrugated Metal Pipe and Arches – General

Add the following after the end of the paragraph:

All corrugated metal pipe and arches shall be a minimum of 14 Ga.

NEW SECTION: M.A.G. SPEC. S796 – Pavement Markings

M.A.G. SPEC. S796.1 – Pavement Markings – Painted Pavement Markings

All painted pavement markings shall be in accordance with the Arizona Department of Transportation Standards and Specifications, Section 708 – Permanent Pavement Markings.

This item of work shall apply to all longitudinal pavement markings and all other pavement markings not specified to be preformed plastic.

Unless otherwise specified, painted pavement markings will be paid for per the proposal, lump sum. Such payment shall be full compensation for furnishing and installing the item complete in place as described and specified.

M.A.G. SPEC. S796.2 – Pavement Markings – Preformed Plastic Pavement Markings

Preformed plastic pavement marking shall be in accordance with the Arizona Department of Transportation Standard Specifications, 1990 edition, Section 705 – Preformed Plastic Pavement Markings.

This item of work shall apply to all lane use arrows, all transverse pavement markings such as crosswalks and stop bar markings, and all pavement legend markings except those required for bicycle lanes.

Unless otherwise specified, preformed plastic pavement markings will be paid for per the proposal, lump sum. Such payment shall be full compensation for furnishing and installing the item complete in place as described and specified.

M.A.G. UNIFORM STANDARD DETAILS FOR PUBLIC WORKS CONSTRUCTION – General

Shall be modified as follows:

All Portland Cement Concrete exposed to weather shall be a minimum of Class A concrete with 5 to 7% air entrainment. This requirement shall apply to all sidewalk, curb and gutter, driveways, and adjustment collars (water valves, manholes, survey monuments, etc.) as well as all other construction items that are exposed to weather. This change applies to concrete specified on the following M.A.G. Standard Details: 120-1, 120-2, 200, 202, 203, 206, 206-1, 206-2, 220, 221, 222, 230, 231, 232, 233, 234, 240, 250, 251, 260, 261, 262, 263, 270, 321, 346, 391-1, 391-2, 501-1, 501-2, 501-3, 501-4, 501-5, 502-1, 502-2, 530, 531, 532, 533-1, 533-2, 534-1, 535, 550, and 552.

M.A.G. Detail No. 120-1 & 120-2 – Survey Marker

Add the following notes to both details:

All survey caps shall be stamped with the registration number of the surveyor responsible for placing the monument.

The top of all survey caps placed in paved areas shall be at least ½" below pavement grade.

M.A.G. Detail No. 220 – Curb and Gutter – Types A, B, C & D

Change for all curb types to show that roadway widths are measured to the back of curb.

M.A.G. Detail No. 230 – Sidewalks

Revise detail to include addition of a minimum of three-inch thick ABC, as per Section 310 under all sidewalk.

M.A.G. Details No. 231, 232, 233 & 234 – Sidewalk Ramps – Types A, B, C & D

Minimum three-inch thick ABC, as per Section 310, shall be included under all sidewalk ramps.

M.A.G. Detail No. 234 – Sidewalk Ramps – Type D

Modify to reduce the back of sidewalk elevation at the sidewalk ramps from 4 ¾" to 4" to conform with ADA requirements. The curb at back of sidewalk similar to Detail #232, shall be added to this detail with a top of curb elevation of 7".

M.A.G. Detail No. 240 – Valley Gutter

Detail No. 240 shall not be used. Use City of Flagstaff Detail J-20.40.

M.A.G. Detail No. 250 & 251 – Driveway Entrances/Return Type Driveways

Modify these details so that the elevation of the driveway at the extended back of the sidewalk shall be at least the adjacent curb height plus 1" above the gutter flow-line elevation unless specifically approved otherwise. Minimum three-inch thick ABC, as per Section 310, shall be added under all driveway entrances.

Change:

The depth of the concrete for commercial and industrial driveways shall be 8” minimum.

Change:

The depth of the concrete for residential driveways shall be 6” minimum.

M.A.G. Detail No. 360 – Fire Hydrant Installation

Revise the detail notes to include:

The crushed rock under the fire hydrant shall be sized from a ¾” minimum to 3” maximum. Volcanic cinders shall not be used.

The dimension from center of the pumper connection to ground line shall be a 18” minimum and a 24” maximum.

M.A.G. Detail No. 420 – Pre-Cast Concrete Sewer Manhole

Remove the Note “*steps not required in 60” M.H.”.

Add the following notes:

Manholes with two or more inlets shall be 60” inside diameter.

Steps shall be installed in 60” manholes as per 48” manhole standard.

Steps in all manholes shall be placed so that the climber faces traffic and the steps are on the same side of the manhole that the sewer pipe enters or exists the manhole.

New manholes shall have a maximum neck height dimension of 26” when measured from finish grade to top of cone or bottom of flat top. Disregard conflicting neck dimensions.

The manhole base of all manholes shall be reinforced with #4 bars 8” on center, both ways placed 4” above subgrade elevation.

A 1” vertical clearance shall be provided between the top of the sewer pipe and the bottom edge of all manhole barrel sections. A suitable radius shall be provided where the manhole floor joins the vertical edge of the invert channel.

M.A.G. Detail No. 421 – Offset Manhole For 8” to 30” Pipe

Remove the Note beginning “1:3 Cement…”.

Add the following note:

The manhole base shall be reinforced with #4 rebars 8” on center, both ways placed 4” above subgrade.

M.A.G. Detail No. 422 – Sewer Manhole and Cover Frame Adjustment

Remove the notes beginning “1:3 Cement…” and “M.H. step in 48”…”.

Add the following notes:

Steps shall be installed in 60” manholes as per 48” manhole standard.

The manhole base shall be reinforced with #4 rebar 8” on center, both ways, placed 4” above sub-grade.

All manhole frame & cover adjustments shall be made in accordance with County Detail H 20.15.

M.A.G. Detail No. 426 – Drop Sewer Connections

Remove all references to “V.C.P.” and replace with “P.V.C. or D.I.P.”.

M.A.G. Detail No. 427 – Stub-Out And Plugs

Remove all references to “V.C.P.” and replace with “P.V.C. or D.I.P.”.

M.A.G. Detail No. 440 – Sewer Building Connection

Remove all references to “V.C.P.” and replace with “P.V.C. or D.I.P.”

Remove the two unnumbered notes beginning”2” x 4” stake…” and replace each with the following note:

A #4 rebar shall be placed vertically at the end of the service for future location purposes. The rebar is to extend from the service line to 6” below finished grade. A brick shall be placed on the surface and connected to the rebar with 12 ga. (min.) galvanized steel or a 12 ga. (min.) copper wire with green insulation.

M.A.G. Detail No. 441 – Sewer Cleanout

Remove references to “vitrified clay” or V.C.P. and replace with “P.V.C. or D.I.P.”.

Add the following note:

Sewer cleanouts shall be used on public sewers only when specifically allowed by the County Engineer.

Appendix One

COCONINO COUNTY PUBLIC WORKS
FEE SCHEDULE

Effective Date: May 2001

MANUALS (Available from Public Works)

Coconino County Engineering Design and Construction Criteria - $25.00

Coconino County Drainage Design Criteria - $25.00

ENCROACHMENT FEES

Processing Charge	$ 25.00
Utility Permits	
200 Feet or Less	$ 50.00
201 - 300 Feet	$ 60.00
301 - 500 Feet	$ 80.00
501 - 1000 Feet	$100.00
1001-2000 Feet	$150.00
>2000 Feet	$150.00+$0.10/Ft over 2000 Feet
Blanket Permit	$150.00 Annual Fee
Commercial Driveway/Grading Permit	$ 25.00
Special Events Permit	$100.00

Note: If the actual size of the project exceeds the initial estimated and permitted size then the permittee shall be responsible for additional fees upon completion.

PLANS REVIEW FEES

Construction Fees	
Initial Review	$100.00 per plan sheet
Second Review	$100.00 per plan sheet
Third Review	$200.00 per plan sheet
Fourth Review	$300.00 per plan sheet
Fifth Review	$400.00 per plan sheet

Further reviews will add $100.00 per plan sheet to the previous per sheet cost.

All plan review fees shall be paid at the time of submission.

GRADING & EXCAVATION PERMIT FEES

The county engineer shall have discretion to require or waive formal submission of engineered plans for grading/excavation. If engineered plans are required the fees shall be those listed above under “Plans Review Fee’s”. In addition the following fees will apply, when engineered plans are not required only the following fees will apply:

TABLE A-33B --- GRADING PERMIT FEES

VOLUME	FEE ($)
500 CUBIC YDS or LESS	$25
500+ to 2000 CUBIC YDS	$50
OVER 2000 CUBIC YDS	$100

OTHER INSPECTIONS AND FEES

1. Inspections outside of normal busness hours ---------- $75/hr.
   (minimum charge – two hours)
2. Reinspection fees assessed under provisions of sec. 108.8 ---------- $150/hr.
3. Inspections for which no fee is specifically indicated ---------- $75/hr.

NOTE: Associated costs incurred by the County (if any) during the course of inspections will be added to inspection fees – these may include (but shall not be limited to) wages for additional personnel or consultants, equipment, overhead, fringe benefits, etc.

Appendix Two

Standard Forms

Bond Number:_____
Premium Amount:_____
Renewal Date(s):_____

PERFORMANCE BOND FOR
SUBDIVISION IMPROVEMENTS
FOR COCONINO COUNTY, ARIZONA

The Principal,_____,a/an_____
Name of Principal State of Formation

_____ and Surety, _____, a corporation
Type of Entity Name of Surety

existing under the laws of the State of _____, and licensed to do business in the State of Arizona, as Surety, are bound to Coconino County, a body politic and corporate of the State of Arizona ("hereinafter referred to as **Coconino County**"), in the sum of _____ Dollars ($_____) the payment of which shall be made to Coconino County in the event of default by the Principal of the Obligations described herein.

OBLIGATIONS:

The purpose of this Bond is to assure the timely completion of all Subdivision Improvements required for the_____,
Name of Subdivision
Coconino County, Arizona, ("**Subdivision**") as set forth in the Cost Estimate of the Project Engineer and approved by the Coconino County Engineer. The Subdivision Improvements are described in **Exhibit "A"** attached hereto and incorporated herein by reference.[1]

This Obligation is to assure the Principal completes the Subdivision Improvements within the time specified by Coconino County to the satisfaction of the Coconino County Engineer and the Board of Supervisors ("BOS"). All Subdivision Improvements shall be completed in accordance with all applicable Federal, State and Coconino County laws, statutes, ordinances, regulations and rules ("Laws").

This Obligation shall remain in full force and effect until the Subdivision Improvements are fully and properly completed in compliance with applicable Laws, unless this Obligation is earlier released in writing by Coconino County. Upon the completion of the Subdivision Improvements, the Principal's Project Engineer shall furnish the Coconino County Engineer with one (1) set of sealed prints and one (1) reproducible set of "As-Built" drawings. The sealed prints shall be marked "As-Built" and shall bear a certification of the Project Engineer that the work was completed in accordance with the approved plans, specifications, and details, and have complied with all applicable laws. The Project Engineer shall also furnish the Coconino County Engineer with all required inspection reports, testing results, and any required approvals or certifications of construction or conditions. Prior to termination of the Obligation, the Project Engineer's certification must be acknowledged and approved by the Coconino County Engineer and

Subdivision Improvements accepted by the BOS as completed. Thereupon, the BOS will formally release the Obligation.

[1] Attach a signed and sealed itemized Engineer's Cost Estimate as approved by the Coconino County Engineer.

DESCRIPTION OF PROJECT WORK AND TIME FOR COMPLETION:

The Project Engineer's Itemized Cost Estimate for the Coconino County, Arizona,

Subdivision known as _____, which is approved by the Coconino County Engineer is attached hereto as **Exhibit "A"** and incorporated by this reference, which, together with the approved Preliminary Plan, the approved final Subdivision Plat and any conditions set by the BOS shall constitute the Project Work, and Time(s) for performance, unless such time(s) is/are extended by approval of Coconino County. These items define the scope of Project Work for the completion of the Subdivision Improvements, all of which are guaranteed by this Bond.

The Principal, Surety, and Underwriter agree to immediately provide written notice to Coconino County of any claims on this Bond, and shall immediately, in writing, notify Coconino County of any nonpayment of premium or other occurrence which could jeopardize the integrity or condition of this Bond.

AGREEMENT FOR PAYMENT:

In the event of any default or breach of this agreement by the Principal or Surety, the Principal and Surety agree that within thirty (30) days receipt of written notice of default or breach, the Surety shall pay to Coconino County all amounts required to complete the Project work, which includes all Subdivision Improvements, and insofar as possible within the amount of the Bond, to thereafter make full payment of monies unpaid for the Project Work to any contractor, subcontractors, or material suppliers, plus any damages or costs including reasonable attorney's fees incurred by Coconino County as a result of a default or breach.

SIGNED, SEALED AND DATED this _____day of _____2003.

PRINCIPAL[2]: _____

_____
Signature

_____
Title

SURETY:_____

_____
Signature

_____
Title

SEAL:

[2]See proposed signature forms. Use appropriate form.

STATE OF_____)

)ss.
County of _____)

The foregoing instrument was acknowledged before me this ____day of_____, 2003,

By_____, _____, of
Name of Officer or Agent Title

_____, a/an_____
_____
Name of Corporation Acknowledging State of Incorporation

corporation, on behalf of the corporation[3].

My Commission Expires:_____

_____
Notary Public

STATE OF_____)
)ss.
County of _____)

The foregoing instrument was acknowledged before me this ____day of_____, 2003,

By_____, _____, of
Name of Officer or Agent Title

_____, a/a_____
_____
Name of Corporation Acknowledging State of Incorporation

corporation, on behalf of the corporation[3].

My Commission Expires:_____

_____
Notary Public

[3]Use appropriate notary forms(s). Additional statutory short forms are provided herewith. You may also use statutory long forms.

SIGNED SEALED AND DATED as of _____, 2003.

{If an entity is signing, Principal must provide an original signed, sealed and notarized Certificate or other appropriate certified documentation showing authority.}

[See signature forms following]

_____
PRINCIPAL

_____
SURETY SEAL

By _____

_____
AGENCY OF RECORD
AGENCY ADDRESS:

_____

_____
(ATTACH AGENT'S POWER OF ATTORNEY)

_____
SIGNATURE

_____
PRINTED OR TYPED NAME

ATTORNEY-IN-FACT FOR

_____
PRINTED OR TYPED NAME OF ATTORNEY-IN-FACT

[Note: Signatures to be notarized using statutory long form or permitted short forms. (see attached samples of short forms.)]

By:_____
Date Signed:_____
Its:_____

STATE OF_____)
)ss.
County of _____)

The foregoing instrument was acknowledged before me this ____day of_____, 2003,

By_____, _____, Coconino County Board of Supervisors, on behalf of Coconino County, a body politic and corporate of the State of Arizona.

IN WITNESS WHEREOF, I set my hand and official seal.

_____

My commission expires: Notary Public

APPROVED AST TO FORM:

COCONINO COUNTY ATTORNEY'S OFFICE:_____

By:_____
Deputy County Attorney

Date Signed:_____

Exhibit C

Date:

IRREVOCABLE STANDBY LETTER OF CREDIT NO. _____

Applicant:

Amount:

Expiration: ***[Expiration date shall be no more than six months <u>after</u> the date on which the subdivision improvements are to be completed.]***

Beneficiary: Coconino County

[*Insert Name of Issuing Bank]* is a financial institution subject to regulation by the State of [*Insert Appropriate State]*.

At the request of [*Insert Name of Applicant]* we hereby establish our Irrevocable Standby Letter of Credit in favor of Coconino County, a body politic and corporate of the State of Arizona, up to the aggregate amount of [*Insert Amount*] as security for completion of subdivision improvements for the [*Insert Name of Subdivision*] as set forth in Exhibit A, Project Engineer's Itemized Cost Estimate, attached hereto and incorporated herein by reference.

All of any portion of the funds available pursuant to this Irrevocable Standby Letter of Credit will be paid upon the written demand of Coconino County. We hereby engage with you that any draft(s) drawn under and in compliance with the terms of this Letter of Credit will be duly honored by us if presented for payments at [*Insert Address*] on or before the close of business, [*Insert Time*], [*Insert Expiration Date*]. A draft drawn on a portion of funds shall not affect the availability of the balance of funds for further drafts under the terms of this Letter of Credit.

Each draft must bear on its face the clause "Drawn under [*Insert Name of Issuing Bank*] Letter of Credit No. _____" and accompanied by the following:

> **Coconino County's certification, signed by the County Manager, stating that the [*Insert Name of Applicant*] has not completed the subdivision improvements as set forth in the Project Engineer's Itemized Cost Estimate attached to Letter of Credit No. _____ as Exhibit A.**

Coconino County need not present any other documentation of any type as a condition of payment.

Excerpt so far as otherwise expressly stated herein, this Letter of Credit is subject to the "Uniform Customs and Practice for Documentary Credit (1993 revision), International Change of Commerce, Publication No. 500."

SIGNATORIES: This letter of Credit is to be signed by the principal office of the issuing banks, and the signature is to be notarized.

COCONINO COUNTY BOARD OF SUPERIVOSRS

_____ _____

Date Signed

STATE OF ARIZONA)
) ss.
County of Coconino)

The foregoing instrument was acknowledged before me this _____ day of _____, 20___ by _____ Coconino County Board of Supervisors, on behalf of Coconino County, a body politic and corporate of the State of Arizona.

IN WITNESS WHEREOF, I Set my hand and official seal.

My commission expires: _____

Notary Public

APPROVED AS TO FORM: **COCONINO COUNTY ATTORNEY'S OFFICE**

_____ **By:**_____

Date Signed **Deputy County Attorney**

PRINCIPAL SIGNATURE FORMS

[Individual(s)]

Unmarried Person

_____
Signature

_____
Printed or Typed Name

Married Person Sole and Separate

_____
Signature

_____
Printed or Typed Name

Married Couple

_____	_____
Printed or Typed Name	**Signature**
_____	_____
Printed or Typed Name	**Signature**

[Proprietorship]

(All owners should sign – If married, both husband and wife. Satisfactory evidence provided that the signatories are binding.)

	_____		
	Business Name		
By:	_____	**By:**	_____
	Signature (Owner)		**Signature (Owner)**
	_____		_____
	Printed or Typed Name		**Printed or Typed Name**

[Corporation]

	_____
	Corporate Name
By:	_____
	Signature
	_____
	Printed or Typed Name
Its:	_____
	Title

[Limited Liability Company}

_____
Limited Liability Company Name

By: _____
Signature

_____
Printed or Typed Name

Its: _____
Title

[Partnership]

_____
Partnership Name

_____
A/An [State and Type of Partnership]

By: _____
Signature

_____
Printed or Typed Name

[Trust]

_____
Name of Trust

By: _____
Signature

_____
Printed or Typed Name
Trustee or Personal Representative for

_____
Name of Trust

[Estate]

_____
Name of Estate

By: _____
Signature

_____
Printed or Typed Name
Personal Representative/Executor/Executrix for

_____
Name of Estate

[Attorney-in-Fact]

By: _____
Signature
_____
Printed or Typed Name
Attorney-in-Fact for
_____
Printed or Typed Name of Principal

[All signatures must be notarized – See the following proposed short forms acceptable in Arizona]

NOTARY FORMS

[Individual(s)]

STATE OF ARIZONA)
) ss.
County of _____)

The foregoing instrument was acknowledged before me this _____ day of _____, 20___, by Name(s) of Person(s) Acknolwedged. Marital Status. [Husband and Wife, a Single person, or a married person dealing with his/her sole and separate property]

My Commission Expires: _____
Notary Public

[Proprietorship]

STATE OF ARIZONA)
) ss.
County of _____)

The foregoing instrument was acknowledged before me this_____ day of _____, 20___,
by Name of Owner, Marital Status and Name of Owner, Marital Status, all owners of Business Name, individually and on behalf of the Proprietorship.

My Commission Expires: _____
Notary Public

[Corporation]

STATE OF ARIZONA)
) ss.
County of _____)

The foregoing instrument was acknowledged before me this _____ day of _____, 20___,
by Name of Officer or Agent, Title, Name of Corporation Acknowledging, a/an State of Incorporation corporation, on behalf of the corporation.

My Commission Expires: _____
Notary Public

[Limited Liability Company]

STATE OF ARIZONA)
) ss.
County of _____)

The foregoing instrument was acknowledged before me this _____ day of _____, 20___, by Name of Person Acknowledged, Title, Name of Limited Liability Company, a/an State of Formation limited liability company, on behalf of the limited liability company.

My Commission Expires: **_____**
Notary Public

[Partnership]

STATE OF ARIZONA)
) ss.
County of _____)

The foregoing instrument was acknowledged before me this _____ day of _____, 20___, by Name of Acknowledging Partner or Agent, partner (or agent), on behalf of Name of Partnership, a/an State of Jurisdiction partnership.

My Commission Expires: **_____**
Notary Public

[Trust]

STATE OF ARIZONA)
) ss.
County of _____)

The foregoing instrument was acknowledged before me this _____ day of _____, 20___, by Name of Acknowledging Person, Trustee (or Personal Representative), of the Name of Trust, a/an State trust.

My Commission Expires: **_____**
Notary Public

{Estate]

STATE OF ARIZONA)
) ss.
County of _____)

The foregoing instrument was acknowledged before me this _____ day of _____, 20___, by Name of Acknowledging Person, Personal Representative (Executrix or Executor), of the Name of Estate, of County and State.

My Commission Expires: **_____**
Notary Public

[Attorney-in-Fact]

STATE OF ARIZONA)
) ss.
County of _____)

The foregoing instrument was acknowledged before me this _____ day of _____, 20___, by Name of Person, as attorney-in-fact on behalf of Name of Principal.
My Commission Expires: **_____**
Notary Public